Agilent 1260 Infinity Isocratic Pump and Quaternary Pump

User Manual

Agilent Technologies

Notices

Manual Part Number

G1310-90012

Edition

06/10

Printed in Germany

Agilent Technologies
Hewlett-Packard-Strasse 8
76337 Waldbronn

This product may be used as a component of an in vitro diagnostic system if the system is registered with the appropriate authorities and complies with the relevant regulations. Otherwise, it is intended only for general laboratory use.

Warranty

The material contained in this document is provided "as is," and is subject to being changed, without notice, in future editions. Further, to the maximum extent permitted by applicable law, Agilent disclaims all warranties, either express or implied, with regard to this manual and any information contained herein, including but not limited to the implied warranties of merchantability and fitness for a particular purpose. Agilent shall not be liable for errors or for incidental or consequential damages in connection with the furnishing, use, or performance of this document or of any information contained herein. Should Agilent and the user have a separate written agreement with warranty terms covering the material in this document that conflict with these terms, the warranty terms in the separate agreement shall control.

Technology Licenses

The hardware and/or software described in this document are furnished under a license and may be used or copied only in accordance with the terms of such license.

Restricted Rights Legend

If software is for use in the performance of a U.S. Government prime contract or subcontract, Software is delivered and licensed as "Commercial computer software" as defined in DFAR 252.227-7014 (June 1995), or as a "commercial item" as defined in FAR 2.101(a) or as "Restricted computer software" as defined in FAR 52.227-19 (June 1987) or any equivalent agency regulation or contract clause. Use, duplication or disclosure of Software is subject to Agilent Technologies' standard commercial license terms, and non-DOD Departments and Agencies of the U.S. Government will receive no greater than Restricted Rights as defined in FAR 52.227-19(c)(1-2) (June 1987). U.S. Government users will receive no greater than Limited Rights as defined in FAR 52.227-14 (June 1987) or DFAR 252.227-7015 (b)(2) (November 1995), as applicable in any technical data.

Safety Notices

CAUTION

A **CAUTION** notice denotes a hazard. It calls attention to an operating procedure, practice, or the like that, if not correctly performed or adhered to, could result in damage to the product or loss of important data. Do not proceed beyond a **CAUTION** notice until the indicated conditions are fully understood and met.

WARNING

A WARNING notice denotes a hazard. It calls attention to an operating procedure, practice, or the like that, if not correctly performed or adhered to, could result in personal injury or death. Do not proceed beyond a WARNING notice until the indicated conditions are fully understood and met.

Contents

1 Introduction

This chapter gives an introduction to the module, instrument overview and internal connectors

Introduction to the Pump

Introduction to the Quaternary Pump

The quaternary pump comprises a solvent cabinet, a vacuum degasser and a four-channel gradient pump. The four-channel gradient pump comprises a high-speed proportioning valve and a pump assembly. It provides gradient generation by low pressure mixing. A solvent cabinet provides enough space for four one-liter bottles. An active seal wash (optional) is available when the quaternary pump is used with concentrated buffer solutions.

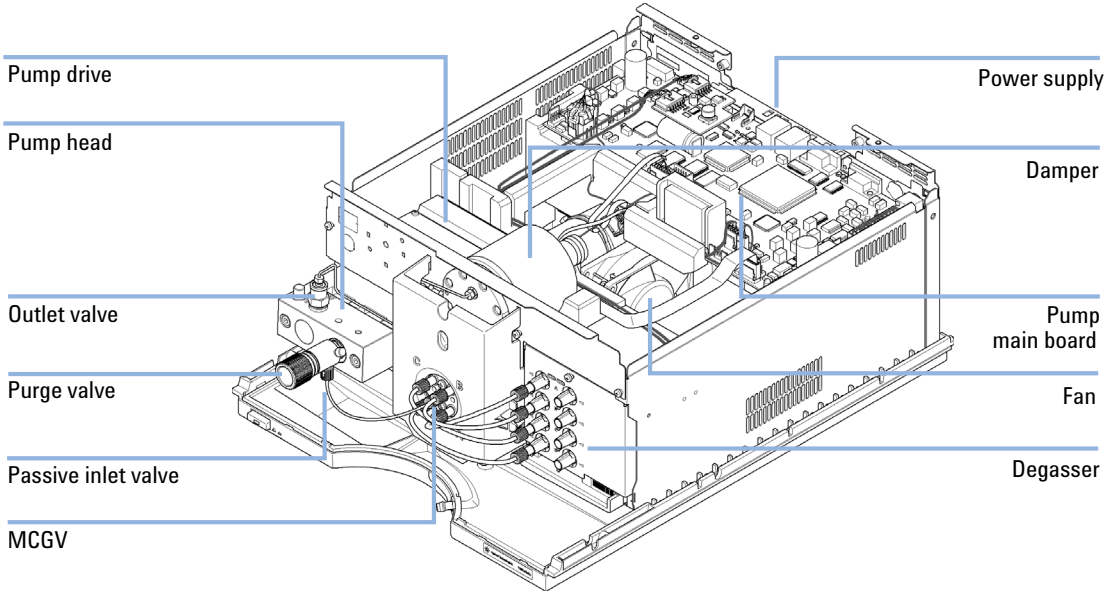

Figure 1 Overview of the Quaternary Pump

Introduction to the Isocratic Pump

The isocratic pump has the same operating principle as the quaternary pump but has only one solvent channel, that means the composition cannot be changed during a method because there is no multi-channel gradient valve (MCGV). The isocratic pump does not include a degasser. An upgrade product (Isocratic to Quaternary Pump Upgrade Kit (p/n G4207-60000)) is available for upgrading the isocratic pump to a quaternary pump including a degasser.

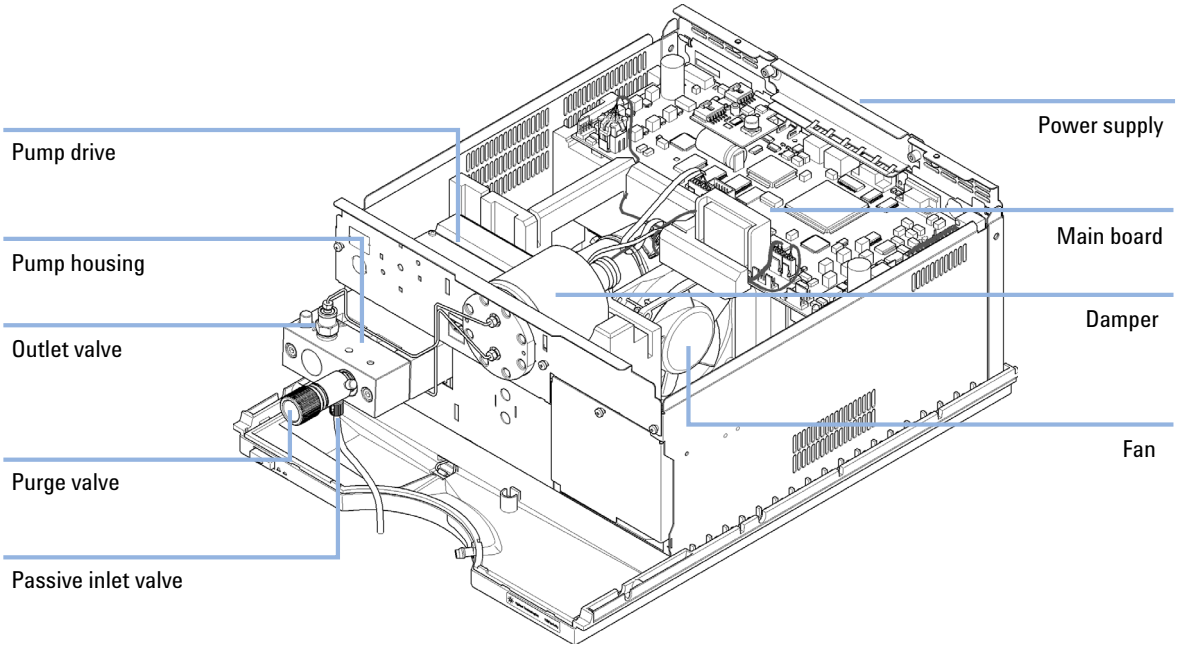

Figure 2 Overview of the Isocratic Pump

Overview of the Hydraulic Path

Both the isocratic pump and quaternary pump are based on a two-channel, dual-plunger in-series design which comprises all essential functions that a solvent delivery system has to fulfill. Metering of solvent and delivery to the high-pressure side are performed by one pump assembly which can generate pressure up to 600 bar.

In the quaternary pump, degassing of the solvents is done in a built-in vacuum degasser. Solvent compositions are generated on the low-pressure side by a high-speed proportioning valve (MCGV).

The pump assembly includes a pump head with a passive inlet valve and an outlet valve. A damping unit is connected between the two piston chambers. A purge valve including a PTFE frit is fitted at the pump outlet for convenient priming of the pump head.

An active seal wash (optional) is available for applications using concentrated buffers as solvents.

Hydraulic Path

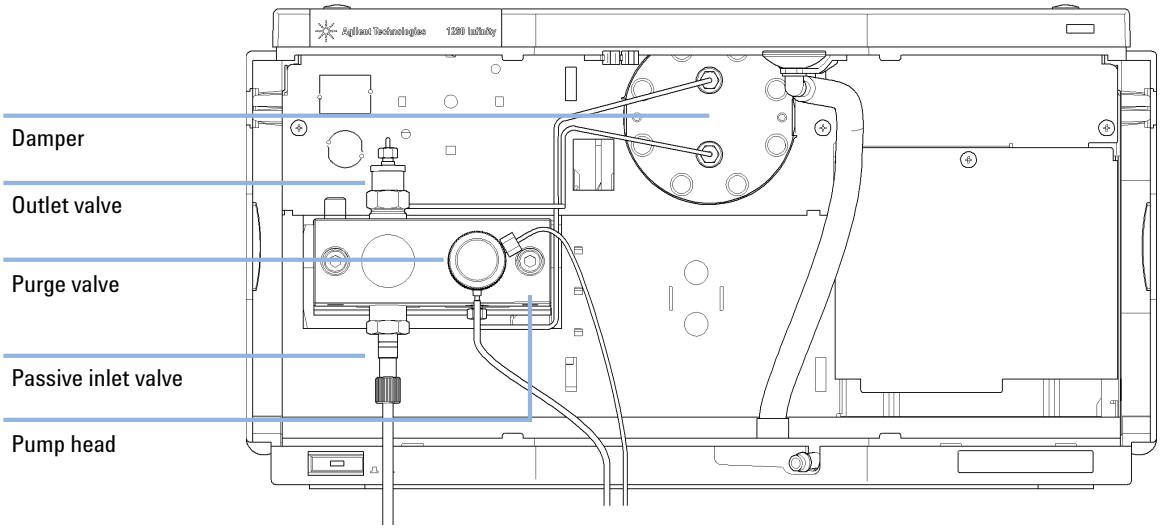

Figure 3 Hydraulic Path of the Isocratic Pump

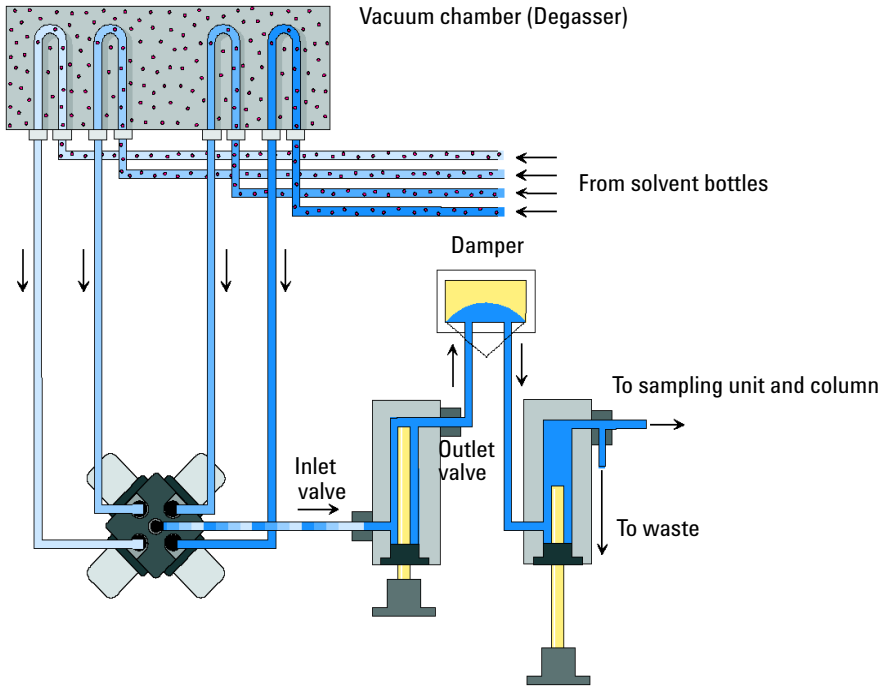

Figure 4 Hydraulic Path of the Quaternary Pump

How Does the Pump Work?

In the quaternary pump, the liquid runs from the solvent reservoir through the degasser to the MCGV and from there to the inlet valve.

For the isocratic pump, the solvent bottle is directly connected to the inlet valve.

The pump assembly comprises two substantially identical piston/chamber units. Both piston/chamber units comprise a ball-screw drive and a pump head with one sapphire piston for reciprocating movement in it.

A servo-controlled variable reluctance motor drives the two ball screw drives in opposite directions. The gears for the ball-screw drives have different circumferences (ratio 2:1) allowing the first piston to move at twice the speed of the second piston. The solvent enters the pump head close to the bottom

limit and leaves it at its top. The outer diameter of the piston is smaller than the inner diameter of the pump head chamber allowing the solvent to fill the gap inbetween. The first piston has a stroke volume in the range of 20 – 100 µL depending on the flow rate. The microprocessor controls all flow rates in a range of 1 µL/min – 10 mL/min. The inlet of the first pumping unit is connected to the passive inlet valve.

The outlet of the first piston/chamber unit is connected through the outlet valve and the damping unit to the inlet of the second piston/chamber unit. The outlet of the purge valve assembly is then connected to the following chromatographic system.

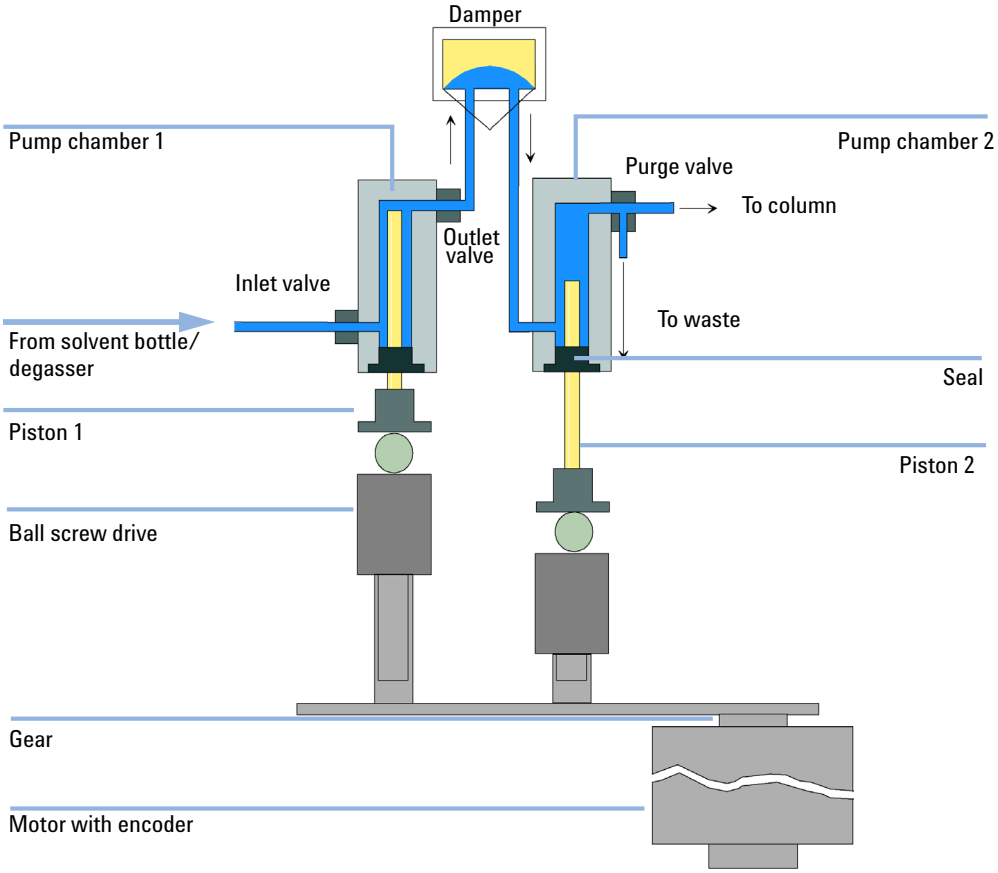

Figure 5 Principle of the Pump

When turned on, the pump runs through an initialization procedure to determine the upper dead position of the first piston. The first piston moves slowly upwards into the mechanical stop of the pump chamber and from there it moves back for a defined distance. The controller stores this piston position in memory. After this initialization the pump starts operation with the set parameters. The passive inlet valve opens and the down-moving piston draws solvent into the first pump chamber. At the same time the second piston moves upwards delivering to the system. After a controller-defined stroke length that depends on the flow rate the drive motor is stopped and the passive inlet valve closes. The motor direction is reversed and moves the first piston up until it reaches the stored upper limit and at the same time the second piston moves downwards. Then the sequence starts again moving the pistons up and down between the two limits. During the up movement of the first piston the solvent in the pump chamber is pressed through the outlet valve into the second pump chamber. The second piston draws in half of the volume displaced by the first piston and the remaining half volume is directly delivered to the system. During the drawing stroke of the first piston, the second piston delivers the drawn volume to the system.

Quaternary pump: For solvent compositions from the solvent bottles A, B, C, D the controller divides the length of the intake stroke in certain fractions in which the gradient valve connects the specified solvent channel to the pump input.

Table 1 Isocratic pump details

Dead volume	800 – 1100 µL, depending on back pressure
Materials in contact with mobile phase	
Pump head	SST, gold, sapphire, ceramic
Active inlet valve	SST, gold, sapphire, ruby, ceramic, PTFE
Outlet valve	SST, gold, sapphire, ruby
Adapter	SST, gold
Purge valve	SST, gold, PTFE, ceramic, PEEK
Degasser chamber	TFE/PDD Copolymer, FEP, PEEK, PPS

Table 2 Quaternary Pump Details

Delay volume	800 – 1100 µL, dependent on back pressure
Materials in contact with mobile phase	
MCGV	PTFE
Pump head	SST, gold, sapphire, ceramic
Active inlet valve	SST, gold, sapphire, ruby, ceramic, PTFE
Outlet valve	SST, gold, sapphire, ruby
Adapter	SST, gold
Purge valve	SST, gold, PTFE, ceramic, PEEK
Damping unit	Gold, SST
Degasser chamber	TFE/PDD Copolymer, FEP, PEEK, PPS

For specifications, of the isocratic pump, see Table 15 on page 40. For specifications of the quaternary pump, see Table 16 on page 41.

How Does Compressibility Compensation Work?

The compressibility of the solvents in use will affect retention-time stability when the back pressure in the system changes (for example, ageing of column). In order to minimize this effect, the pump provides a compressibility compensation feature which optimizes the flow stability according to the solvent type. The compressibility compensation is set to a default value and can be changed through the user interface.

Without a compressibility compensation the following will happen during a stroke of the first piston. The pressure in the piston chamber increases and the volume in the chamber will be compressed depending on back pressure and solvent type. The volume displaced into the system will be reduced by the compressed volume.

With a compressibility value set the processor calculates a compensation volume, that depends on the back pressure of the system and the selected compressibility. This compensation volume will be added to the normal stroke volume and compensates the previously described *loss* of volume during the delivery stroke of the first piston.

How Does Variable Stroke Volume Work?

Due to the compression of the pump-chamber volume each piston stroke of the pump will generate a small pressure pulsation, influencing the flow stability of the pump. The amplitude of the pressure pulsation depends mainly on the stroke volume and the compressibility compensation for the solvent in use. Small stroke volumes generate pressure pulsations of smaller amplitude than higher stroke volumes at the same flow rate. In addition, the frequency of the pressure pulsations is higher. This decreases the influence of flow pulsations on quantitative results.

In gradient mode smaller stroke volumes result in a lower flow ripple improve composition ripple.

The module uses a processor-controlled spindle system for driving its pistons. The normal stroke volume is optimized for the selected flow rate. Small flow rates use a small stroke volume while higher flow rates use a higher stroke volume.

By default, the stroke volume for the pump is set to AUTO mode. This means that the stroke is optimized for the flow rate in use. A change to larger stroke volumes is possible but not recommended.

Early Maintenance Feetback

Maintenance requires the exchange of components which are subject to wear or stress. Ideally, the frequency at which components are exchanged should be based on the intensity of usage of the module and the analytical conditions, and not on a predefined time interval. The early maintenance feedback (**EMF**) feature monitors the usage of specific components in the instrument, and provides feedback when the user-selectable limits have been exceeded. The visual feedback in the user interface provides an indication that maintenance procedures should be scheduled.

EMF Counters

EMF counters increment with use and can be assigned a maximum limit which provides visual feedback in the user interface when the limit is exceeded. Some counters can be reset to zero after the required maintenance procedure.

Using the EMF Counters

The user-settable **EMF** limits for the **EMF Counters** enable the early maintenance feedback to be adapted to specific user requirements. The useful maintenance cycle is dependent on the requirements for use. Therefore, the definition of the maximum limits need to be determined based on the specific operating conditions of the instrument.

Setting the EMF Limits

The setting of the **EMF** limits must be optimized over one or two maintenance cycles. Initially the default **EMF** limits should be set. When instrument performance indicates maintenance is necessary, take note of the values displayed by the **EMF counters**. Enter these values (or values slightly less than the displayed values) as **EMF** limits, and then reset the **EMF counters** to zero. The next time the **EMF counters** exceed the new **EMF** limits, the **EMF** flag will be displayed, providing a reminder that maintenance needs to be scheduled.

Instrument Layout

The industrial design of the module incorporates several innovative features. It uses Agilent's E-PAC concept for the packaging of electronics and mechanical assemblies. This concept is based upon the use of expanded polypropylene (EPP) layers of foam plastic spacers in which the mechanical and electronic boards components of the module are placed. This pack is then housed in a metal inner cabinet which is enclosed by a plastic external cabinet. The advantages of this packaging technology are:

- virtual elimination of fixing screws, bolts or ties, reducing the number of components and increasing the speed of assembly/disassembly,
- the plastic layers have air channels molded into them so that cooling air can be guided exactly to the required locations,
- the plastic layers help cushion the electronic and mechanical parts from physical shock, and
- the metal inner cabinet shields the internal electronics from electromagnetic interference and also helps to reduce or eliminate radio frequency emissions from the instrument itself.

Electrical Connections

- The CAN bus is a serial bus with high speed data transfer. The two connectors for the CAN bus are used for internal module data transfer and synchronization.
- One analog output provides signals for integrators or data handling systems.
- The interface board slot is used for external contacts and BCD bottle number output or LAN connections.
- The REMOTE connector may be used in combination with other analytical instruments from Agilent Technologies if you want to use features such as start, stop, common shut down, prepare, and so on.
- With the appropriate software, the RS-232C connector may be used to control the module from a computer through a RS-232C connection. This connector is activated and can be configured with the configuration switch.
- The power input socket accepts a line voltage of 100 – 240 VAC ± 10 % with a line frequency of 50 or 60 Hz. Maximum power consumption varies by module. There is no voltage selector on your module because the power supply has wide-ranging capability. There are no externally accessible fuses, because automatic electronic fuses are implemented in the power supply.

NOTE Never use cables other than the ones supplied by Agilent Technologies to ensure proper functionality and compliance with safety or EMC regulations.

Serial Number Information (ALL)

The serial number information on the instrument labels provide the following information:

CCXZZ00000	Format
CC	Country of manufacturing (DE Germany)
X	Alphabetic character A-Z (used by manufacturing)
ZZ	Alpha-numeric code 0-9, A-Z, where each combination unambiguously denotes a module (there can be more than one code for the same module)
00000	Serial number

Rear View of the Module

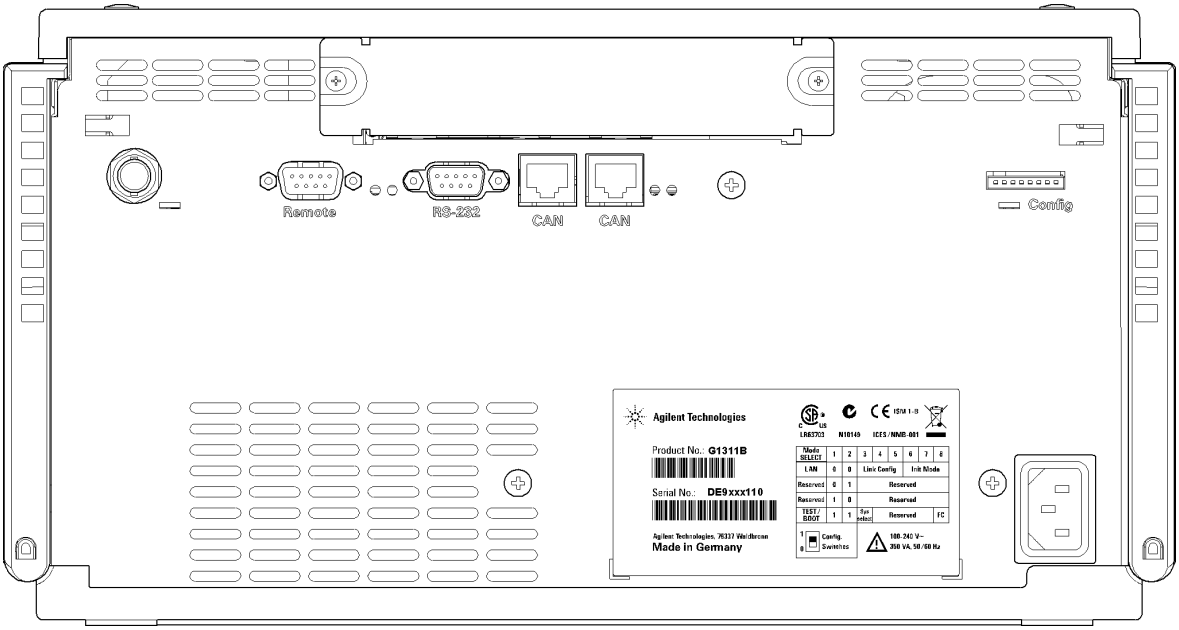

Figure 6 Rear view of the pump

Interfaces

The Agilent 1200 Infinity Series modules provide the following interfaces:

Table 3 Agilent 1200 Infinity Series Interfaces

Module	CAN	LAN/BCD (optional)	LAN (on-board)	RS-232	Analog	APG Remote	Special
Pumps							
G1310B Iso Pump G1311B Quat Pump G1311C Quat Pump VL G1312B Bin Pump G1312C Bin Pump VL 1376A Cap Pump G2226A Nano Pump	2	Yes	No	Yes	1	Yes	
G4220A/B Bin Pump	2	No	Yes	Yes	No	Yes	
G1361A Prep Pump	2	Yes	No	Yes	No	Yes	CAN-DC- OUT for CAN slaves
Samplers							
G1329B ALS G2260A Prep ALS	2	Yes	No	Yes	No	Yes	THERMOSTAT for G1330B
G1364B FC-PS G1364C FC-AS G1364D FC-µS G1367E HiP ALS G1377A HiP micro ALS G2258A DL ALS	2	Yes	No	Yes	No	Yes	THERMOSTAT for G1330B CAN-DC- OUT for CAN slaves
G4226A ALS	2	Yes	No	Yes	No	Yes	
Detectors							
G1314B VWD VL G1314C VWD VL+	2	Yes	No	Yes	1	Yes	
G1314E/F VWD	2	No	Yes	Yes	1	Yes	

Table 3 Agilent 1200 Infinity Series Interfaces

Module	CAN	LAN/BCD (optional)	LAN (on-board)	RS-232	Analog	APG Remote	Special
G4212A/B DAD	2	No	Yes	Yes	1	Yes	
G1315C DAD VL+ G1365C MWD G1315D DAD VL G1365D MWD VL	2	No	Yes	Yes	2	Yes	
G1321B FLD G1362A RID	2	Yes	No	Yes	1	Yes	
G4280A ELSD	No	No	No	Yes	Yes	Yes	EXT Contact AUTOZERO
Others							
G1316A/C TCC	2	No	No	Yes	No	Yes	
G1322A DEG	No	No	No	No	No	Yes	AUX
G1379B DEG	No	No	No	Yes	No	No	AUX
G4227A Flex Cube	2	No	No	No	No	No	
G4240A CHIP CUBE	2	Yes	No	Yes	No	Yes	CAN-DC- OUT for CAN slaves THERMOSTAT for G1330A/B (NOT USED)

NOTE The detector (DAD/MWD/FLD/VWD/RID) is the preferred access point for control via LAN. The inter-module communication is done via CAN.

- CAN connectors as interface to other modules
- LAN connector as interface to the control software
- RS-232C as interface to a computer
- REMOTE connector as interface to other Agilent products
- Analog output connector(s) for signal output

Overview Interfaces

CAN

The CAN is inter-module communication interface. It is a 2-wire serial bus system supporting high speed data communication and real-time requirement.

LAN

The modules have either an interface slot for an LAN card (e.g. Agilent G1369A/B LAN Interface) or they have an on-board LAN interface (e.g. detectors G1315C/D DAD and G1365C/D MWD). This interface allows the control of the module/system via a connected PC with the appropriate control software.

NOTE

If an Agilent detector (DAD/MWD/FLD/VWD/RID) is in the system, the LAN should be connected to the DAD/MWD/FLD/VWD/RID (due to higher data load). If no Agilent detector is part of the system, the LAN interface should be installed in the pump or autosampler.

RS-232C (Serial)

The RS-232C connector is used to control the module from a computer through RS-232C connection, using the appropriate software. This connector can be configured with the configuration switch module at the rear of the module. Refer to *Communication Settings for RS-232C*.

NOTE

There is no configuration possible on main boards with on-board LAN. These are pre-configured for

- 19200 baud,
- 8 data bit with no parity and
- one start bit and one stop bit are always used (not selectable).

The RS-232C is designed as DCE (data communication equipment) with a 9-pin male SUB-D type connector. The pins are defined as:

Table 4 RS-232C Connection Table

Pin	Direction	Function
1	In	DCD
2	In	RxD
3	Out	TxD
4	Out	DTR
5		Ground
6	In	DSR
7	Out	RTS
8	In	CTS
9	In	RI

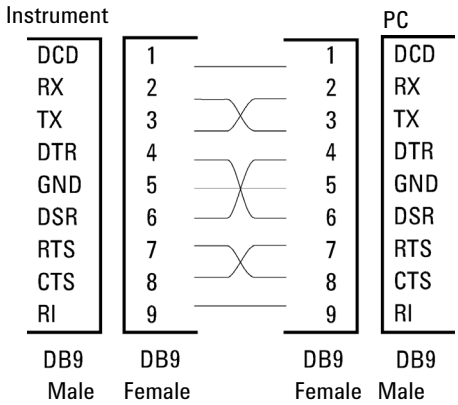

Figure 7 RS-232 Cable

Analog Signal Output

The analog signal output can be distributed to a recording device. For details refer to the description of the module's main board.

APG Remote

The APG Remote connector may be used in combination with other analytical instruments from Agilent Technologies if you want to use features as common shut down, prepare, and so on.

Remote control allows easy connection between single instruments or systems to ensure coordinated analysis with simple coupling requirements.

The subminiature D connector is used. The module provides one remote connector which is inputs/outputs (wired- or technique).

To provide maximum safety within a distributed analysis system, one line is dedicated to **SHUT DOWN** the system's critical parts in case any module detects a serious problem. To detect whether all participating modules are switched on or properly powered, one line is defined to summarize the **POWER ON** state of all connected modules. Control of analysis is maintained by signal readiness **READY** for next analysis, followed by **START** of run and optional **STOP** of run triggered on the respective lines. In addition **PREPARE** and **START REQUEST** may be issued. The signal levels are defined as:

- standard TTL levels (0 V is logic true, + 5.0 V is false),
- fan-out is 10,
- input load is 2.2 kOhm against + 5.0 V, and
- output are open collector type, inputs/outputs (wired- or technique).

NOTE All common TTL circuits operate with a 5 V power supply. A TTL signal is defined as "low" or L when between 0 V and 0.8 V and "high" or H when between 2.0 V and 5.0 V (with respect to the ground terminal).

Table 5 Remote Signal Distribution

Pin	Signal	Description
1	DGND	Digital ground
2	PREPARE	(L) Request to prepare for analysis (for example, calibration, detector lamp on). Receiver is any module performing pre-analysis activities.
3	START	(L) Request to start run / timetable. Receiver is any module performing run-time controlled activities.
4	SHUT DOWN	(L) System has serious problem (for example, leak: stops pump). Receiver is any module capable to reduce safety risk.

Table 5 Remote Signal Distribution

Pin	Signal	Description
5		Not used
6	POWER ON	(H) All modules connected to system are switched on. Receiver is any module relying on operation of others.
7	READY	(H) System is ready for next analysis. Receiver is any sequence controller.
8	STOP	(L) Request to reach system ready state as soon as possible (for example, stop run, abort or finish and stop injection). Receiver is any module performing run-time controlled activities.
9	START REQUEST	(L) Request to start injection cycle (for example, by start key on any module). Receiver is the autosampler.

Special Interfaces

Some modules have module specific interfaces/connectors. They are described in the module documentation.

Setting the 8-bit Configuration Switch

Setting the 8-bit Configuration Switch (On-Board LAN)

The 8-bit configuration switch is located at the rear of the module. Switch settings provide configuration parameters for LAN, serial communication protocol and instrument specific initialization procedures.

All modules with on-board LAN, e.g. G1315/65C/D, G1314D/E/F, G4212A/B, G4220A:

- Default is ALL switches DOWN (best settings) - Bootp mode for LAN.
- For specific LAN modes switches 3-8 must be set as required.
- For boot/test modes switches 1+2 must be UP plus required mode.

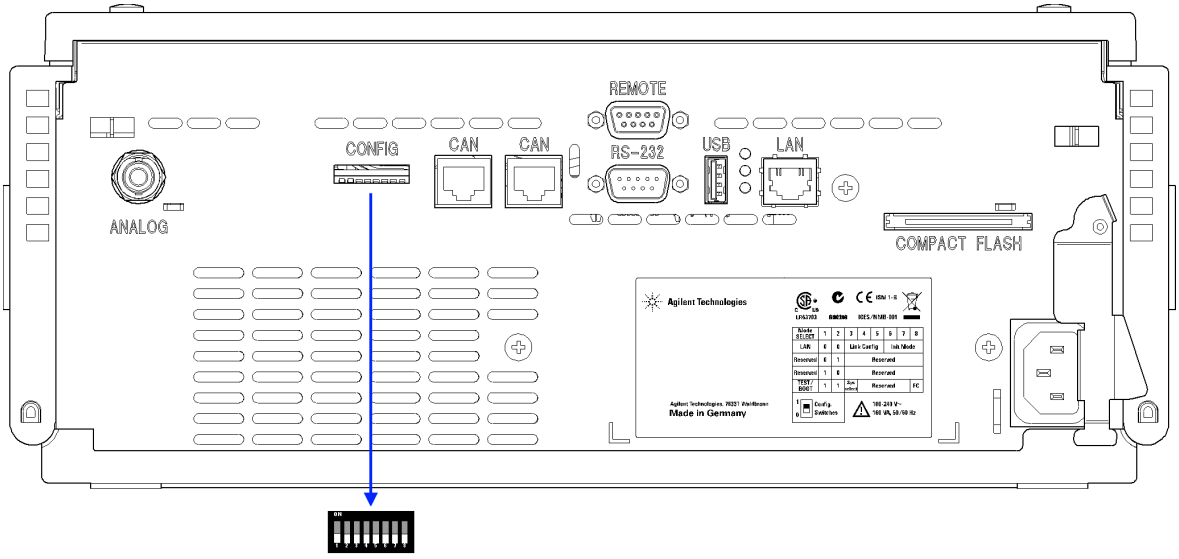

Figure 8 Location of Configuration Switch (example shows a G4212A DAD)

NOTE To perform any LAN configuration, SW1 and SW2 must be set to OFF. For details on the LAN settings/configuration refer to chapter LAN Configuration.

Table 6 8-bit Configuration Switch (with on-board LAN)

	Mode		Function					
	SW 1	SW 2	SW 3	SW 4	SW 5	SW 6	SW 7	SW 8
LAN	*0*	*0*	Link Configuration			Init Mode Selection		
Auto-negotiation			*0*	x	x	x	x	x
10 MBit, half-duplex			1	*0*	*0*	x	x	x
10 MBit, full-duplex			1	*0*	1	x	x	x
100 MBit, half-duplex			1	1	*0*	x	x	x
100 MBit, full-duplex			1	1	1	x	x	x
Bootp			x	x	x	*0*	*0*	*0*
Bootp & Store			x	x	x	*0*	*0*	1
Using Stored			x	x	x	*0*	1	*0*
Using Default			x	x	x	*0*	1	1
TEST	1	1	System					NVRAM
Boot Resident System			1					x
Revert to Default Data (Coldstart)			x	x	x			1

Legend:

0 (switch down), 1 (switch up), x (any position)

NOTE When selecting the mode TEST, the LAN settings are: Auto-Negotiation & Using Stored.

NOTE For explanation of "Boot Resident System" and "Revert to Default Data (Coldstart)" refer to "Special Settings" on page 32.

Setting the 8-bit Configuration Switch (without On-Board LAN)

The 8-bit configuration switch is located at the rear of the module.

Modules that do not have their own LAN interface (e.g. the TCC) can be controlled through the LAN interface of another module and a CAN connection to that module.

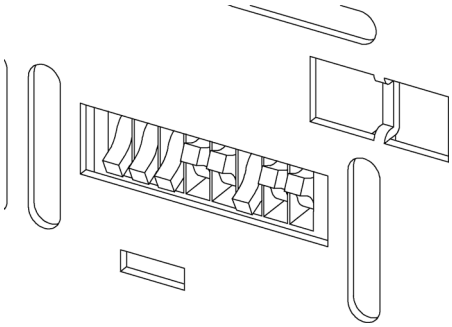

Figure 9 Configuration switch (settings depend on configured mode)

All modules without on-board LAN:

- default is ALL DIPS DOWN (best settings) - Bootp mode for LAN
- for boot/test modes DIPS 1+2 must be UP plus required mode

Switch settings provide configuration parameters for GPIB address, serial communication protocol and instrument specific initialization procedures.

NOTE With the introduction of the Agilent 1260 Infinity, all GPIB interfaces have been removed. The preferred communication is LAN.

NOTE The following tables represent the configuration switch settings for the modules without on-board LAN only.

Table 7 8-bit Configuration Switch (without on-board LAN)

Mode Select	1	2	3	4	5	6	7	8
RS-232C	0	1	Baudrate			Data Bits	Parity	
Reserved	1	0	Reserved					
TEST/BOOT	1	1	RSVD	SYS		RSVD	RSVD	FC

NOTE The LAN settings are done on the LAN Interface Card G1369A/B. Refer to the documentation provided with the card.

Communication Settings for RS-232C

The communication protocol used in the column compartment supports only hardware handshake (CTS/RTR).

Switches 1 in down and 2 in up position define that the RS-232C parameters will be changed. Once the change has been completed, the column instrument must be powered up again in order to store the values in the non-volatile memory.

Table 8 Communication Settings for RS-232C Communication (without on-board LAN)

Mode Select	1	2	3	4	5	6	7	8
RS-232C	0	1	Baudrate			Data Bits	Parity	

Use the following tables for selecting the setting which you want to use for RS-232C communication. The number 0 means that the switch is down and 1 means that the switch is up.

Table 9 Baudrate Settings (without on-board LAN)

Switches			Baud Rate	Switches			Baud Rate
3	**4**	**5**		**3**	**4**	**5**	
0	0	0	9600	1	0	0	9600
0	0	1	1200	1	0	1	14400
0	1	0	2400	1	1	0	19200
0	1	1	4800	1	1	1	38400

Table 10 Data Bit Settings (without on-board LAN)

Switch 6	Data Word Size
0	7 Bit Communication
1	8 Bit Communication

Table 11 Parity Settings (without on-board LAN)

Switches		Parity
7	8	
0	0	No Parity
1	0	Odd Parity
1	1	Even Parity

One start bit and one stop bit are always used (not selectable).

Per default, the module will turn into 19200 baud, 8 data bit with no parity.

Special Settings

The special settings are required for specific actions (normally in a service case).

NOTE The tables include both settings for modules – with on-board LAN and without on-board LAN. They are identified as LAN and no LAN.

Boot-Resident

Firmware update procedures may require this mode in case of firmware loading errors (main firmware part).

If you use the following switch settings and power the instrument up again, the instrument firmware stays in the resident mode. It is not operable as a module. It only uses basic functions of the operating system for example, for communication. In this mode the main firmware can be loaded (using update utilities).

Table 12 Boot Resident Settings (without on-board LAN)

	Mode Select	SW1	SW2	SW3	SW4	SW5	SW6	SW7	SW8
LAN	TEST/BOOT	1	1	1	0	0	0	0	0
No LAN	TEST/BOOT	1	1	0	0	1	0	0	0

Forced Cold Start

A forced cold start can be used to bring the module into a defined mode with default parameter settings.

CAUTION Loss of data

Forced cold start erases all methods and data stored in the non-volatile memory. Exceptions are diagnosis and repair log books which will not be erased.

→ Save your methods and data before executing a forced cold start.

If you use the following switch settings and power the instrument up again, a forced cold start has been completed.

Table 13 Forced Cold Start Settings (without on-board LAN)

	Mode Select	SW1	SW2	SW3	SW4	SW5	SW6	SW7	SW8
LAN	TEST/BOOT	1	1	0	0	0	0	0	1
No LAN	TEST/BOOT	1	1	0	0	1	0	0	1

2
Site Requirements and Specifications

This chapter provides information on environmental requirements, physical and performance specifications.

Site Requirements

A suitable environment is important to ensure optimal performance of the instrument.

Power Considerations

The module power supply has wide ranging capability. It accepts any line voltage in the range described in Table 14 on page 39. Consequently there is no voltage selector in the rear of the module. There are also no externally accessible fuses, because automatic electronic fuses are implemented in the power supply.

WARNING

Hazard of electrical shock or damage of your instrumentation

can result, if the devices are connected to a line voltage higher than specified.

➔ Connect your instrument to the specified line voltage only.

WARNING

Module is partially energized when switched off, as long as the power cord is plugged in.

Repair work at the module can lead to personal injuries, e.g. electrical shock, when the cover is opened and the module is connected to power.

➔ Always unplug the power cable before opening the cover.

➔ Do not connect the power cable to the instrument while the covers are removed.

CAUTION

Unaccessable power plug.

In case of emergency it must be possible to disconnect the instrument from the power line at any time.

- ➔ Make sure the power connector of the instrument can be easily reached and unplugged.
- ➔ Provide sufficient space behind the power socket of the instrument to unplug the cable.

Power Cords

Different power cords are offered as options with the module. The female end of all power cords is identical. It plugs into the power-input socket at the rear. The male end of each power cord is different and designed to match the wall socket of a particular country or region.

WARNING

Absence of ground connection or use of unspecified power cord

The absence of ground connection or the use of unspecified power cord can lead to electric shock or short circuit.

- ➔ Never operate your instrumentation from a power outlet that has no ground connection.
- ➔ Never use a power cord other than the Agilent Technologies power cord designed for your region.

WARNING

Use of unsupplied cables

Using cables not supplied by Agilent Technologies can lead to damage of the electronic components or personal injury.

- ➔ Never use cables other than the ones supplied by Agilent Technologies to ensure proper functionality and compliance with safety or EMC regulations.

WARNING

Unintended use of supplied power cords

Using power cords for unintended purposes can lead to personal injury or damage of electronic equipment.

➔ Never use the power cords that Agilent Technologies supplies with this instrument for any other equipment.

Bench Space

The module dimensions and weight (see Table 14 on page 39) allow you to place the module on almost any desk or laboratory bench. It needs an additional 2.5 cm (1.0 inches) of space on either side and approximately 8 cm (3.1 inches) in the rear for air circulation and electric connections.

If the bench should carry an Agilent system, make sure that the bench is designed to bear the weight of all modules.

The module should be operated in a horizontal position.

Condensation

CAUTION

Condensation within the module

Condensation will damage the system electronics.

➔ Do not store, ship or use your module under conditions where temperature fluctuations could cause condensation within the module.

➔ If your module was shipped in cold weather, leave it in its box and allow it to warm slowly to room temperature to avoid condensation.

Physical Specifications

Table 14 Physical Specifications

Type	Specification	Comments
Weight	11 kg (25 lbs)	
Dimensions (height × width × depth)	180 x 345 x 435 mm (7.0 x 13.5 x 17 inches)	
Line voltage	100 – 240 VAC, ± 10%	Wide-ranging capability
Line frequency	50 or 60 Hz, ± 5%	
Power consumption	180 VA, 55 W / 188 BTU	Maximum
Ambient operating temperature	4–55 °C (41–131 °F)	
Ambient non-operating temperature	-40–70 °C (-4–158 °F)	
Humidity	< 95%, at 25–40 °C (77–104 °F)	Non-condensing
Operating Altitude	Up to 2000 m (6562 ft)	
Non-operating altitude	Up to 4600 m (15091 ft)	For storing the module
Safety standards: IEC, CSA, UL	Installation Category II, Pollution Degree 2	For indoor use only.

Performance Specifications

Table 15 Performance Specification Agilent 1260 Infinity Isocratic Pump (G1310B)

Type	Specification
Hydraulic system	Dual piston in series pump with proprietary servo-controlled variable stroke drive, floating pistons
Setable flow range	0.001 – 10 mL/min, in 0.001 mL/min increments
Flow range	0.2 – 10.0 mL/min
Flow precision	≤ 0.07 % RSD, or ≤ 0.02 min SD whatever is greater, based on retention time at constant room temperature
Flow accuracy	±1 % or 10 µL/min whatever is greater, pumping degassed H_2O at 10 MPa
Pressure	Operating range 0 – 60 MPa (0 – 600 bar, 0 – 8700 psi) up to 5 mL/min Operating range 0 – 20 MPa (0 – 200 bar, 0 – 2950 psi) up to 10 mL/min
Pressure pulsation	< 2 % amplitude (typically < 1.3 %), or < 3 bar at 1 mL/min isopropanol, at all pressures > 10 bar (147 psi)
Compressibility compensation	User-selectable, based on mobile phase compressibility
Recommended pH range	1.0 – 12.5 , solvents with pH < 2.3 should not contain acids which attack stainless steel
Control and data evaluation	Agilent control software
Analog output	For pressure monitoring, 1.33 mV/bar, one output
Communications	Controller-area network (CAN), RS-232C, APG remote: ready, start, stop and shut-down signals, LAN optional

Table 16 Performance Specification Agilent 1260 Infinity Quaternary Pump (G1311B)

Type	Specification
Hydraulic system	Dual piston in series pump with proprietary servo-controlled variable stroke drive, floating pistons
Setable flow range	0.001 – 10 mL/min, in 0.001 mL/min increments
Flow range	0.2 – 10.0 mL/min
Flow precision	< 0.07 % RSD, or < 0.02 min SD whatever is greater, based on retention time at constant room temperature
Flow accuracy	± 1 % or 10 µL/min whatever is greater, pumping degassed H_2O at 10 MPa
Pressure	Operating range 0 – 60 MPa (0 – 600 bar, 0 – 8700 psi) up to 5 mL/min Operating range 0 – 20 MPa (0 – 200 bar, 0 – 2950 psi) up to 10 mL/min
Pressure pulsation	< 2 % amplitude (typically < 1.3 %), or < 3 bar at 1 mL/min isopropanol, at all pressures > 10 bar (147 psi)
Compressibility compensation	User-selectable, based on mobile phase compressibility
Recommended pH range	1.0 – 12.5 , solvents with pH < 2.3 should not contain acids which attack stainless steel
Gradient formation	Low pressure quaternary mixing/gradient capability using proprietary high-speed proportioning valve
Delay volume	600 – 800 µL, dependent on back pressure
Composition range	0 – 95 % or 5 – 100 %, user selectable
Composition precision	< 0.2 % RSD, or < 0.04 min SD whatever is greater, at 0.2 and 1 mL/min
Control and data evaluation	Agilent control software
Analog output	For pressure monitoring, 1.33 mV/bar, one output
Communications	Controller-area network (CAN), RS-232C, APG Remote: ready, start, stop and shut-down signals, LAN optional

NOTE For use with flow rates below 500 µL/min a vacuum degasser is required.

3
Installing the Pump

This chapter gives information about the preferred stack setup for your system and the installation of your module.

Unpacking the Pump

If the delivery packaging shows signs of external damage, please call your Agilent Technologies sales and service office immediately. Inform your service representative that the instrument may have been damaged during shipment.

CAUTION

"Defective on arrival" problems

If there are signs of damage, please do not attempt to install the module. Inspection by Agilent is required to evaluate if the instrument is in good condition or damaged.

➔ Notify your Agilent sales and service office about the damage.

➔ An Agilent service representative will inspect the instrument at your site and initiate appropriate actions.

Delivery Checklist

Ensure all parts and materials have been delivered with the pump. The delivery checklist is shown in "Isocratic Pump Checklist" on page 45 and in Table 17 on page 44. To aid in parts identification, please refer to chapter *Parts and Materials for Maintenance*. Please report missing or damaged parts to your local Agilent Technologies sales and service office.

Table 17 Quaternary Pump Checklist

Description	Quantity
Solvent cabinet, including all plastic parts (p/n 5065-9981)	1
Solvent bottle, amber (p/n 9301-1450)	1
Solvent bottle, transparent (p/n 9301-1420) (optional, quaternary pump only)	3
Syringe, Plastic (p/n 9301-0411)	1
Syringe adapter luer/barb (p/n 0100-1681)	1
Column Eclipse Plus C18, 4.6 x 100 mm, 3.5 µm (p/n 959961-902) (optional)	1
Column Poroshell 120 EC-C18, 4.5 x 50 mm, 2.7 µm (p/n 699975-902) (optional)	1

Table 17 Quaternary Pump Checklist

Description	Quantity
Column SB-C18, 4.6 x 150 mm, 5 µm (p/n 883975-902) (optional)	1
HPLC Starter Kit incl. 0.17 mm i.d. cap (p/n G4201-68707) (optional) else: HPLC Starter Kit incl. 0.12 mm i.d. cap (p/n G4202-68707) (optional)	1 1
HPLC System Tool Kit (p/n G4203-68708) (optional)	1
LAN Communication Interface board (p/n G1369A or G1369-60001) (optional)	1
Agilent LC Hardware Documentation DVD (p/n G4800-64500) (optional)	1
Agilent Lab Advisor (p/n G4800-64010) (optional) else: LC HW User Information + Utilities DVD (p/n G4800-64005)	1 1
Accessory Kit (p/n G1311-68755) (see "Accessory Kit G1311-68755" on page 46)	1

Isocratic Pump Checklist

Isocratic Pump Checklist

p/n	Description
G1310-64060	Agilent 1260 Infinity Isocratic Pump G1310B
5065-9981	Solvent cabinet, including all plastic parts
9301-1450	Solvent bottle, amber
G1311-60003	Bottle-head assembly
5042-2461	Waste tube, purge valve, 5 m
	Power cord
5181-1519	CAN cable, Agilent module to module, 1 m
03394-60600	Agilent module to 3396A Series I integrators
	Signal cable
G1310-90111	Service Manual
G1310-68755	Accessory Kit

Accessory Kit G1311-68755

Accessory Kit G1311-68755

p/n	Description
5062-2461	Waste tube, 5 m (reorder pack)
5063-6527	Tubing assembly, i.d. 6 mm, o.d. 9 mm, 1.2 m (to waste)
5181-1519	CAN cable, Agilent module to module, 1 m
5988-8453EN	Capillary/fitting starter kit brochure
9222-0519	Bag, plastic
G1329-87300	Capillary 0.17 mm, 900 mm
G1311-90107	Algae note
5042-9954	Tubing clip (2x), re-order 4/pk
G1311-60003	Bottle-head assembly

Optimizing the Stack Configuration

If your module is part of a complete Agilent 1260 Infinity Liquid Chromatograph, you can ensure optimum performance by installing the following configurations. These configurations optimize the system flow path, ensuring minimum delay volume.

One Stack Configuration

Ensure optimum performance by installing the modules of the Agilent 1260 Infinity LC System in the following configuration (see Figure 10 on page 48 and Figure 11 on page 49). This configuration optimizes the flow path for minimum delay volume and minimizes the bench space required.

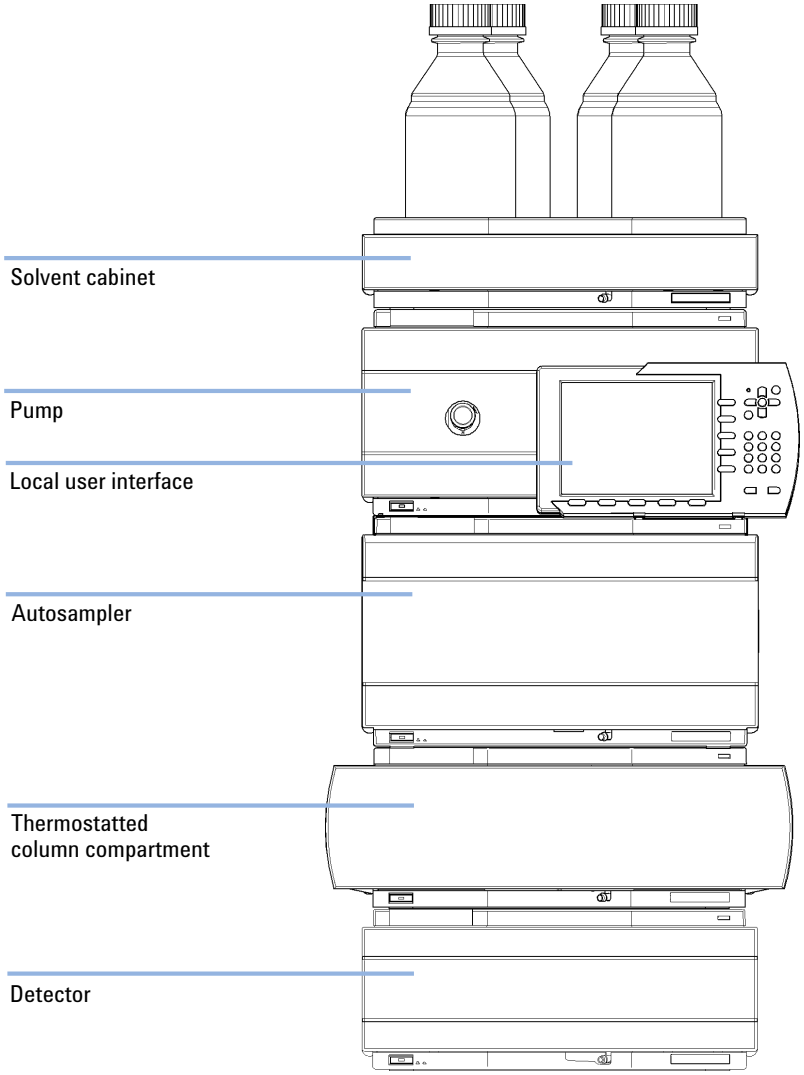

Figure 10 Recommended Stack Configuration (Front View)

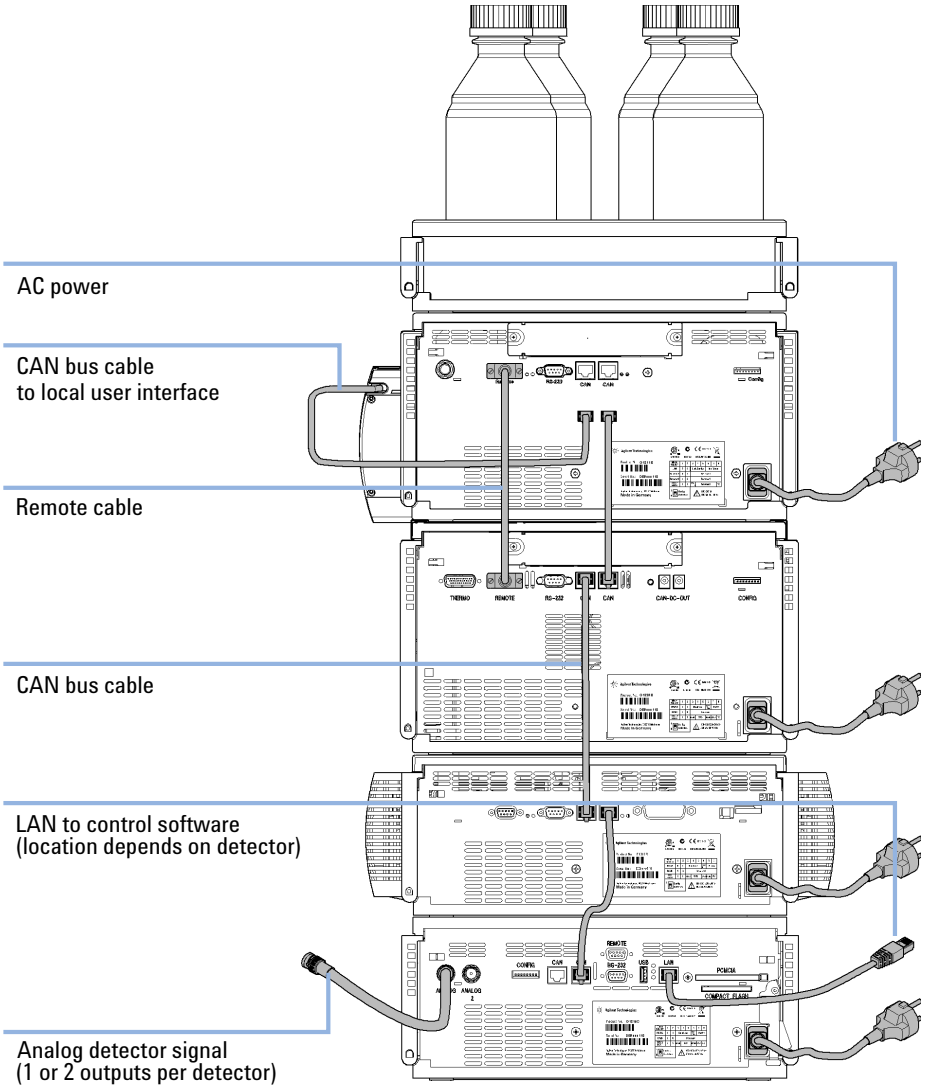

Figure 11 Recommended Stack Configuration (Rear View)

Installing the Pump

Parts required

#	p/n	Description
1		Pump
1		Data System
1	G4208A	Instant Pilot
1		Power cord

For other cables see text below and "Cable Overview" on page 166.

Preparations

- Locate bench space.
- Provide power connections.
- Unpack the module.

WARNING

Module is partially energized when switched off, as long as the power cord is plugged in.

Repair work at the module can lead to personal injuries, e.g. shock hazard, when the cover is opened and the module is connected to power.

→ Make sure that it is always possible to access the power plug.

→ Remove the power cable from the instrument before opening the cover.

→ Do not connect the power cable to the Instrument while the covers are removed.

CAUTION

"Defective on arrival" problems

If there are signs of damage, please do not attempt to install the module. Inspection by Agilent is required to evaluate if the instrument is in good condition or damaged.

→ Notify your Agilent sales and service office about the damage.

→ An Agilent service representative will inspect the instrument at your site and initiate appropriate actions.

1 Place the module on the bench in a horizontal position.

2 Ensure the power switch on the front of the module is OFF (switch stands out).

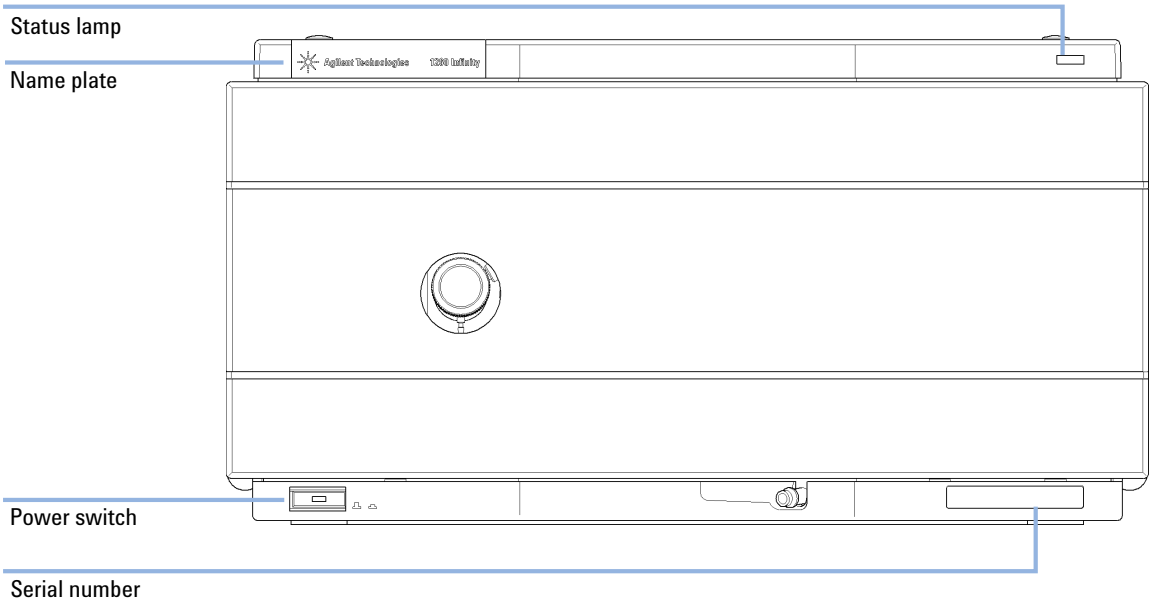

Figure 12 Front of Pump

3 Connect the power cable to the power connector at the rear of the module.

4 Connect the required interface cables to the quaternary pump, see "Connecting Modules and Control Software" on page 53.

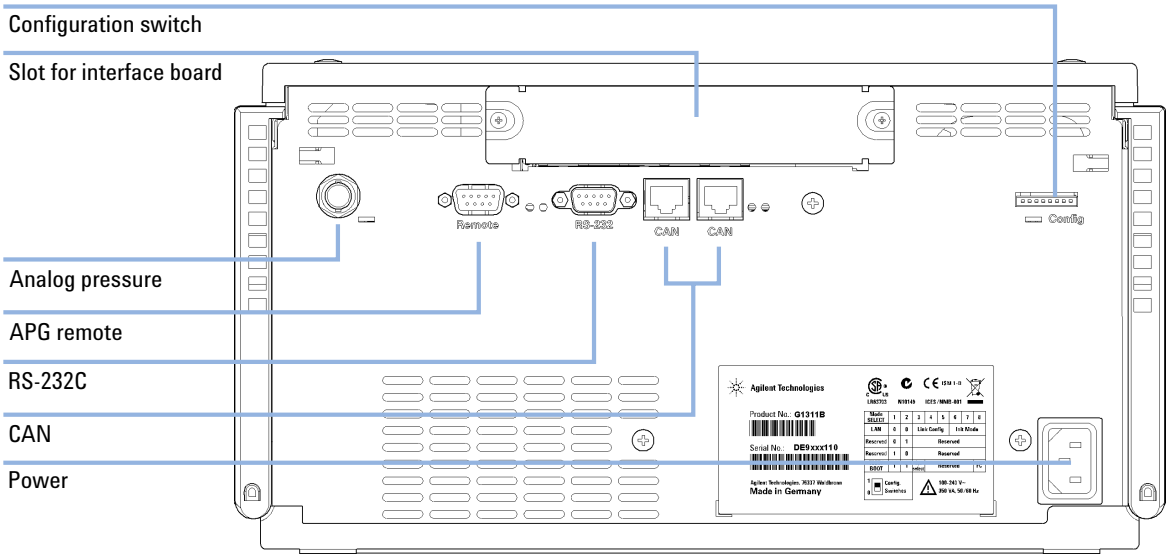

5 Connect all capillaries, solvent tubes and waste tubing (see "Flow Connections of the Pump" on page 56).

6 Press the power switch to turn on the module.

NOTE The power switch stays pressed in and a green indicator lamp in the power switch is on when the module is turned on. When the line power switch stands out and the green light is off, the module is turned off.

7 Purge the quaternary pump (see "Initial Priming" on page 59).

NOTE The pump was shipped with default configuration settings. To change these settings, see "Setting the 8-bit Configuration Switch (without On-Board LAN)" on page 29.

Connecting Modules and Control Software

WARNING

Use of unsupplied cables

Using cables not supplied by Agilent Technologies can lead to damage of the electronic components or personal injury.

→ Never use cables other than the ones supplied by Agilent Technologies to ensure proper functionality and compliance with safety or EMC regulations.

Connecting Modules

1. Place the individual modules in a stack configuration as shown in Figure 10 on page 48.
2. Ensure the power switches on the front of the modules are OFF (switches stand out).
3. Plug a CAN cable into the CAN connector at the rear of the respective module (except vacuum degasser).
4. Connect the CAN cable to the CAN connector of the next module, see Figure 11 on page 49.
5. Press in the power switches to turn on the modules.

Connecting a Vacuum Degasser

NOTE The quaternary pump has a built-in degasser. For the isocratic pump, an external degasser can be used and a pump upgrade to the quaterary pump including a built-in degasser is possible.

1. Place the vacuum degasser in the stack of modules as shown in Figure 10 on page 48.
2. Connect the bottle head assembly in the solvent reservoir to the degasser inlet. Connect the degasser outlet to the inlet valve of the pump.
3. Ensure the power switch at the front of the vacuum degasser is OFF (switch stands out).
4. Plug an APG cable into the APG remote connector at the rear of the degasser.
5. Connect the APG cable to the APG remote connector of the pump, see Figure 11 on page 49.
6. Press in the power switch to turn on the vacuum degasser.

NOTE The AUX output is intended for troubleshooting. It provides a DC voltage in the range of 0 – 1 V which is proportional to the vacuum level in the degasser chambers.

Connecting Control Software and/or G4208 A Instant Pilot

NOTE With the introduction of the Agilent 1260 Infinity, all GPIB interfaces have been removed. The preferred communication is LAN.

NOTE Usually the detector is producing the most data in the stack, followed by the pump, and it is therefore highly recommended to use either of these modules for the LAN connection.

1. Ensure the power switches on the front of the modules in the stack are OFF (switches stand out).
2. If there are no other 1260 with LAN port in the HPLC stack, install a G1369B LAN board into the extension slot of the pump.
3. Connect the LAN enabled module with a LAN cable to the data system.
4. Plug the CAN connector of the Instant Pilot into any available CAN port of the 1260 system.
5. Plug a CAN cable into the CAN connector of the Instant Pilot.
6. Connect the CAN cable to the CAN connector of one of the modules.
7. Press in the power switches to turn on the modules.

NOTE The Agilent control software can also be connected to the system through a LAN cable, which requires the installation of a LAN- board. For more information about connecting the Instant Pilot or Agilent control software refer to the respective user manual. For connecting the Agilent 1260 Infinity equipment to non-Agilent 1260 Infinity equipment, see "Introduction to the Quaternary Pump" on page 8.

Flow Connections of the Pump

Parts required

#	Description
1	Other modules
1	Parts from accessory kit
2	wrenches 1/4 - 5/16 inch for capillary connections

Preparations

Pump is installed in the LC system

WARNING

Toxic, flammable and hazardous solvents, samples and reagents

The handling of solvents, samples and reagents can hold health and safety risks.

- → When working with these substances observe appropriate safety procedures (for example by wearing goggles, safety gloves and protective clothing) as described in the material handling and safety data sheet supplied by the vendor and follow good laboratory practice.
- → The amount of substances should be reduced to the minimal volume required for the analysis.
- → Do not operate the instrument in an explosive atmosphere.

1 Remove the front cover by pressing the snap fasteners on both sides.

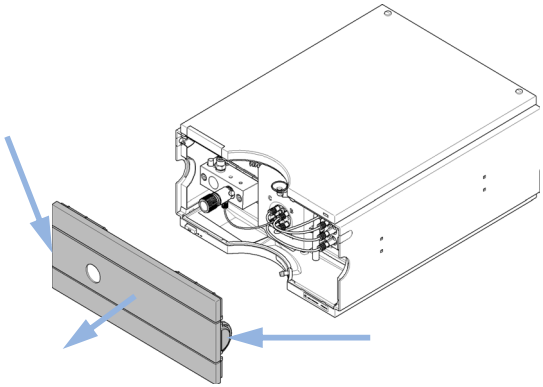

Figure 13 Removing the Front Corver

2 Place the solvent cabinet on top of the quaternary pump.

3 Put the bottle-head assemblies into solvent reservoirs containing your mobile phase and place the bottle in the solvent cabinet.

4 Connect the inlet tubes from the bottle-head assemblies to the inlet connectors A to D (typically the left connection of the channel) of the vacuum degasser. Fix the tubes in the tube clips of the pump.

5 Connect the solvent tubes to the outlet connectors (typically right connection of the channel) of the vacuum degasser.

6 Using a piece of sanding paper connect the waste tubing to the purge valve and place it into your waste system.

7 If the pump is not part of an Agilent 1260 Infinity system stack or placed on the bottom of a stack, connect the corrugated waste tube to the waste outlet of the pump leak handling system.

8 Connect the pump outlet capillary (pump to injection device) to the outlet of the purge valve.

9 Prime your system before first use (see "Initial Priming" on page 59).

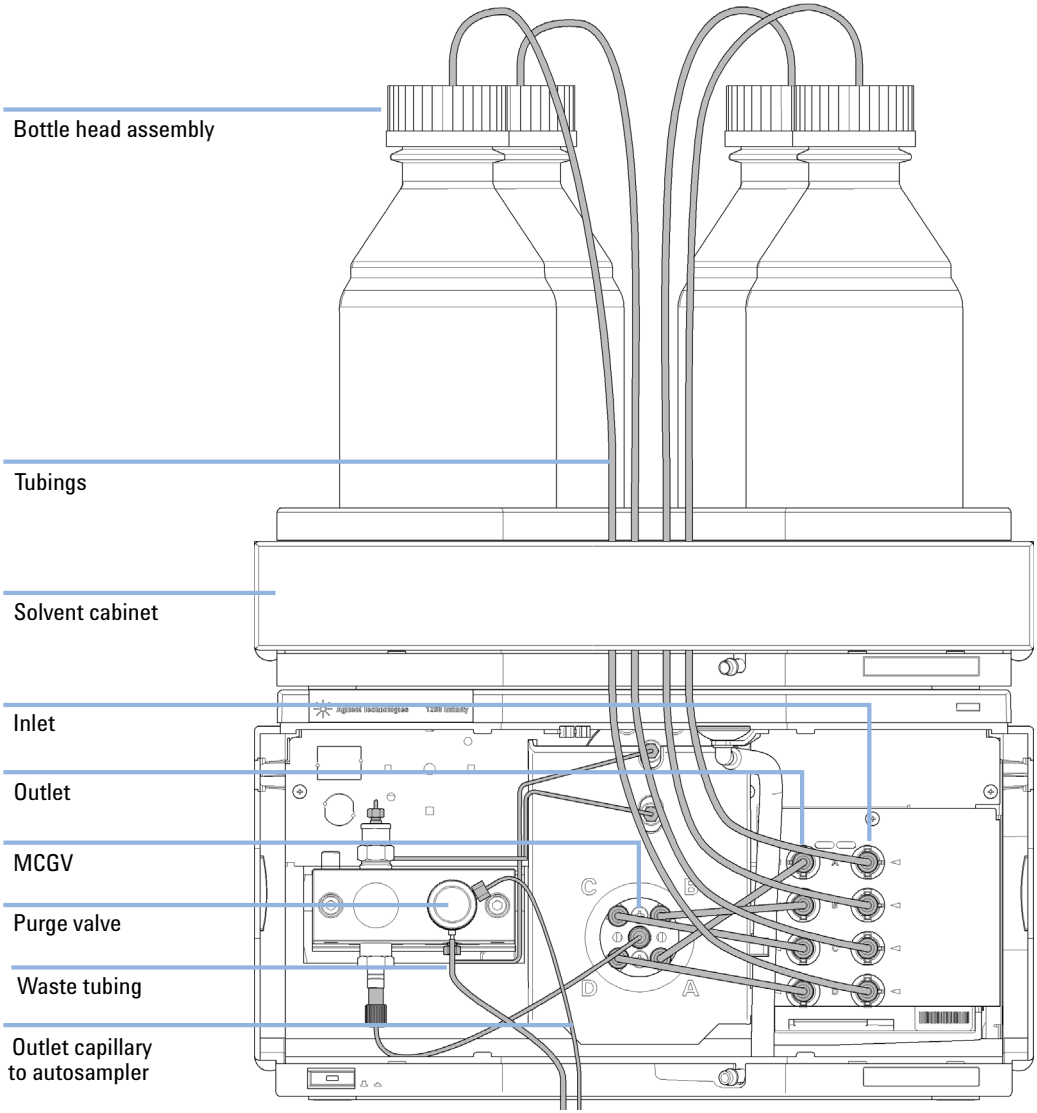

Figure 14 Flow Connections of the Quaternary Pump

Priming the System

Initial Priming

When

Before a new degasser or new solvent tubing can be used, it is necessary to prime the system. Isopropanol (IPA) is recommended as priming solvent due to its miscibility with nearly all HLPC solvents and its excellent wetting properties.

Parts required

#	Description
1	Isopropanol

Preparations

Connect all modules hydraulically as described in the respective module manuals.

Fill each solvent bottle with 100 mL isopropanol

Switch the system on

WARNING

When opening capillary or tube fittings solvents may leak out.

The handling of toxic and hazardous solvents and reagents can bear health risks.

→ Please observe appropriate safety procedures (for example, goggles, safety gloves and protective clothing) as described in the material handling and safety data sheet supplied by the solvent vendor, especially when toxic or hazardous solvents are used.

NOTE

The purge tool of the LabAdvisor or Instrument Utilities can be used for automatically purging the pump.

NOTE

If the pump is not able to aspirate the solvent from the bottles, a syringe can be used to draw the solvent manually through tubing and degasser.

NOTE When priming the vacuum degasser with a syringe, the solvent is drawn through the degasser tubes very quickly. The solvent at the degasser outlet will therefore not be fully degassed. Pump for approximately 10 minutes at your desired flow rate before starting an analysis. This will allow the vacuum degasser to properly degas the solvent in the degasser tubes.

1. Open the purge valve of the pump
2. Set the flow rate to 5 mL/min.
3. Select channel A1
4. Turn the flow on
5. Observe if the solvent in the tubing of channel A1 is advancing towards the pump. If it isn't, disconnect the solvent tubing from the solvent selection valve, attach a syringe with a syringe adapter and pull the liquid through the degasser. Reattach the tubing to the solvent selection valve.
6. Pump 30 mL isopropanol to remove residual air bubbles.
7. Switch to the next solvent channel and repeat steps 5 and 6 until all channels have been purged.
8. Turn the flow off and close the purge valve.

Regular Priming

When

When the pumping system has been turned off for a certain time (for example, overnight) air will rediffuse into the solvent channel between the vacuum degasser and the pump. Solvents containing volatile ingredients will slightly lose these if left in the degasser without flow for a prolonged period of time.

Preparations

Switch the system on

NOTE

The purge tool of the LabAdvisor or Instrument Utilities can be used for automatically purging the pump.

1. Open the purge valve of your pump by turning it counterclockwise and set the flow rate to 5 mL/min.
2. Flush the vacuum degasser and all tubes with at least 10 mL of solvent.
3. Repeat step 1 and 2 for the other channel(s) of the pump.
4. Set the required composition and flow rate for your application and close the purge valve.
5. Pump for approximately 10 minutes before starting your application.

Changing Solvents

When

When the solvent of a channel is to be replaced by another solvent that is not compatible (solvents are immiscible or one solvent contains a buffer) it is necessary to follow the procedure below to prevent clogging of the pump by salt precipitation or residual liquid droplets in parts of the system.

Parts required

#	Description
1	Purging solvent(s), see Table 18 on page 63

Preparations

Remove the column and replace it by a ZDV fitting.

Prepare bottles with appropriate intermediate solvents (see Table 18 on page 63)

1. If the channel is not filled with a buffer, proceed to step 4.
2. Place the solvent intake filter into a bottle of water.
3. Flush the channel at a flow rate suitable for the installed tubing (typically 3-5 mL/min) for 10 min.
4. Modify the flow path of your system as required for your application. For delay volume optimization see the Rapid Resolution System manual.

CAUTION

Buffer salt of aqueous buffers may precipitate in residual isopropanol.

Capillaries and filter may be cloged by precipitating salt.

➔ Don't perform steps 5 to 7 for channels run with aqueous buffer as solvent.

5. Replace the solvent bottle by a bottle of isopropanol.
6. Flush the channel at a flow rate suitable for the installed tubing (typically 3-5 mL/min) for 5 min.
7. Swap the bottle of isopropanol with a bottle of solvent for your application.
8. Repeat steps 1 to 7 for the other channel(s) of the pump.
9. Install the desired column, set the required composition and flow rate for your application and equilibrate the system for approx. 10 minutes prior to starting a run.

Table 18 Choice of Priming Solvents for Different Purposes

Activity	Solvent	Comments
After an installation When switching between reverse phase and normal phase (both times)	Isopropanol Isopropanol	Best solvent to flush air out of the system Miscible with almost all solvents
After an installation	Ethanol or methanol	Alternative to isopropanol (second choice) if no isopropanol is available
To clean the system when using buffers After changing aqueous solvents	HPLC grade water HPLC grade water	Best solvent to re-dissolve buffer crystals Best solvent to re-dissolve buffer crystals
After the installation of normal phase seals (P/N 0905-1420)	Hexane + 5% isopropanol	Good wetting properties

4
Using the Pump

This chapter explains the operational parameters of the module.

Hints for Successful Use of the Isocratic Pump

- Always place solvent cabinet with the solvent bottle(s) on top of the pump (or at a higher level).
- When using salt solutions and organic solvents in the Agilent 1260 Infinity Quaternary Pump it is recommended to connect the salt solution to one of the bottom gradient valve ports and the organic solvent to one of the upper gradient valve ports. It is best to have the organic channel directly above the salt solution channel. Regular flushing with water of all MCGV channels is recommended to remove all possible salt deposits in the valve ports.
- Before operating the pump flush the vacuum degasser with at least two volumes (30 mL), especially when turned off for a certain length of time (for example, during the night) and volatile solvent mixtures are used in the channels (see “Regular Priming” on page 61).
- Prevent blocking of solvent inlet filters (never use the pump without solvent inlet filter). Growth of algae should be avoided (see “Prevent Blocking of Solvent Filters” on page 68).
- Check purge valve frit and column frit in regular time intervals. A blocked purge valve frit can be identified by black or yellow layers on its surface or by a pressure greater than 10 bar, when pumping distilled water at a rate of 5 mL/min with an open purge valve.
- When using the pump at low flow rates (for example, 0.2 mL/min) check all 1/16 inch fittings for any signs of leaks.
- Always exchange the purge valve frit, too, when exchanging the seals.
- When using buffer solutions, flush the system with water before switching it off. The seal wash option should be used when buffer solutions of 0.1 M or higher will be used for long time periods.
- Check the pump plungers for scratches when changing the plunger seals. Scratched plungers will lead to micro leaks and will decrease the lifetime of the seal.
- After changing plunger seals apply the seal wear-in procedure (see “Maintenance of a Pump Head Without Seal Wash Option” on page 130).

Hints for Successful Use of the Quaternary Pump

- Always place the solvent cabinet with the solvent bottles on top of the quaternary pump (or at a higher level).
- When using salt solutions and organic solvents in the Agilent 1260 Infinity Quaternary Pump VL it is recommended to connect the salt solution to one of the bottom gradient valve ports and the organic solvent to one of the upper gradient valve ports. It is best to have the organic channel directly above the salt solution channel. Regular flushing of all MCGV channels with water is recommended to remove all possible salt deposits in the valve ports.
- Before operating the quaternary pump, flush the pump and vacuum degasser, see "Regular Priming" on page 61). This is especially recommended if it has been turned off for some time (for example, overnight) and volatile solvent mixtures are used in the channels.
- Prevent blocking of solvent inlet filters. Never use the pump without solvent inlet filter. Prevent the growth of algae, see "Prevent Blocking of Solvent Filters" on page 68).
- Regularly check the purge valve frit and column frit. A blocked purge valve frit can be identified by a black or yellow surface, deposits or by a pressure greater than 10 bar, when pumping distilled water at a rate of 5 mL/min with an open purge valve.
- When using the quaternary pump at low flow rates (for example, 0.2 mL/min) check all 1/16-inch fittings for any signs of leaks.
- Whenever exchanging the pump seals the purge valve frit should be exchanged, too.
- When using buffers or other salt solutions, flush the system with water before switching it off. The seal wash option should be used when salt concentrations of 0.1 M or higher will be used for long time periods.
- Check the pump pistons for scratches when changing the piston seals. Scratched pistons will cause micro leaks and will decrease the lifetime of the seal.
- Pressurize the system according to the wear in procedure after changing the piston seals (see "Maintenance of a Pump Head Without Seal Wash Option" on page 130).
- Consider recommendations given in the solvent information section, see "Solvent Information" on page 187.

Prevent Blocking of Solvent Filters

Contaminated solvents or algae growth in the solvent bottle will reduce the lifetime of the solvent filter and will influence the performance of the module. This is especially true for aqueous solvents or phosphate buffers (pH 4 to 7). The following suggestions will prolong lifetime of the solvent filter and will maintain the performance of the module.

- Use a sterile, if possible amber, solvent bottle to slow down algae growth.
- Filter solvents through filters or membranes that remove algae.
- Exchange solvents every two days or refilter.
- If the application permits add 0.0001-0.001M sodium azide to the solvent.
- Place a layer of argon on top of your solvent.
- Avoid exposure of the solvent bottle to direct sunlight.

NOTE Never use the system without solvent filter installed.

Algae Growth in HPLC Systems

The presence of algae in HPLC systems can cause a variety of problems that may be incorrectly diagnosed as instrument or application problems. Algae grow in aqueous media, preferably in a pH range of 4-8. Their growth is accelerated by buffers, for example phosphate or acetate. Since algae grow through photosynthesis, light will also stimulate their growth. Even in distilled water small-sized algae grow after some time.

Instrumental Problems Associated With Algae

Algae deposit and grow everywhere within the HPLC system causing:

- Deposits on ball valves, inlet or outlet, resulting in unstable flow or total failure of the pump.
- Small pore solvent inlet filters to plug, resulting in unstable flow or total failure of the pump.
- Small pore high pressure solvent filters, usually placed before the injector to plug resulting in high system pressure.
- Column filters to plug giving high system pressure.
- Flow cell windows of detectors to become dirty resulting in higher noise levels (since the detector is the last module in the flow path, this problem is less common).

Symptoms Observed with the Agilent 1260 Infinity HPLC

In contrast to the HP 1090 and HP 1050 Series HPLC systems which use helium degassing, algae have a better chance to grow in systems such as the Agilent 1260 Infinity where helium is not used for degassing (most algae need oxygen and light for growth).

The presence of algae in the Agilent 1260 Infinity can cause the following to occur:

- PTFE frits, PTFE frit (pack of 5) (p/n 01018-22707), (purge valve assembly) and column filter blockage causing increased system pressure. Algae appear as white or yellowish-white deposits on filters. Typically black particles from the normal wear of the piston seals do not cause the PTFE

frits to block over short-term usage. Please refer to the section "Exchanging the Purge Valve Frit or the Purge Valve" on page 126 in this manual.

- Short lifetime of solvent filters (bottle head assembly). A blocked solvent filter in the bottle, especially when only partly blocked, is more difficult to identify and may show up as gradient performance problems, intermittent pressure fluctuations etc.
- Algae growth may also be the possible source for failures of the ball valves and other components in the flow path.

How to Prevent and/or Reduce the Algae Problem

- Always use freshly prepared solvents, especially use demineralized water which was filtered through about 0.2 µm filters.
- Never leave mobile phase in the instrument for several days without flow.
- Always discard old mobile phase.
- Use the amber solvent bottle (Solvent bottle, amber (p/n 9301-1450)) supplied with the instrument for your aqueous mobile phase.
- If possible add a few mg/l sodium azide or a few percent organic solvent to the aqueous mobile phase.

5
Optimiziming Performance

This chapter gives hints on how to optimize the performance or use additional devices.

When to Use a Vacuum Degasser

The pump does not necessarily require degassing. But for the following conditions the vacuum degasser is recommended:

- if your detector is used with maximum sensitivity in the low UV wavelength range,
- if your application requires highest injection precision, or
- if your application requires highest retention-time reproducibility (mandatory at flow rates below 0.5 mL/min).

Operational Hints for the Vacuum Degasser

If you are using the vacuum degasser for the first time, if the vacuum degasser was switched off for any length of time (for example, overnight), or if the vacuum degasser lines are empty, you should prime the vacuum degasser before running an analysis.

The vacuum degasser can be primed either by drawing solvent through the degasser with a syringe or by pumping with the pump.

Priming the degasser with a syringe is recommended, when:

- vacuum degasser is used for the first time, or vacuum tubes are empty, or
- changing to solvents that are immiscible with the solvent currently in the vacuum tubes.

Priming the vacuum degasser by using the pump at high flow rate (3 – 5 mL/min) is recommended, when:

- pump was turned off for a length of time (for example, during night) and volatile solvent mixtures are used, or
- solvents have been changed.

For more information see the Agilent 1260 Infinity Standard Degasser User Manual (p/n G1322-90012).

Operational Hints for the Multi Channel Gradient Valve (MCGV)

In a mixture of salt solutions and organic solvent the salt solution might be well dissolved in the organic solvent without showing precipitations. However in the mixing point of the gradient valve, at the boundary between the two solvents, micro precipitation is possible. Gravity forces the salt particles to fall down. Normally the A channel of the valve is used for the aqueous/salt solution and the B channel of the pump is used for the organic solvent. If used in this configuration the salt will fall back into the salt solution and will be dissolved. When using the pump in a different configuration (e.g., D - salt solution, A - organic solvent) the salt can fall into the port of the organic solvent and may lead to performance problems.

NOTE

When using salt solutions and organic solvents it is recommended to connect the salt solution to one of the bottom ports of the MCGV and the organic solvent to one of the upper gradient valve ports. It is best to have the organic channel directly above the salt solution channel. Regular flushing with water of all MCGV channels is recommended to remove all possible salt deposits in the valve ports.

When to use the Seal Wash Option

Highly concentrated buffer solutions will reduce the lifetime of the seals and pistons in your pump. The seal wash option allows to maintain the seal lifetime by flushing the back side of the seal with a wash solvent.

The seal wash option is strongly recommended when buffer concentrations of 0.1 M or higher will be used for long time periods in the pump.

The active seal wash upgrade can be ordered as G1398A.

The seal wash option comprises a support ring, secondary seal, gasket and seal holder for both piston sides. A wash bottle filled with water /isopropanol (90/10) is placed above the pump in the solvent cabinet and the peristaltic pump moves a flow through the pump head removing all possible buffer crystals from the back of the pump seal.

CAUTION

Wash seals running dry

Running dry is the worst case for a wash seal and drastically reduces its lifetime.

The seal will build up sticky layers on the surface of the piston. These sticky layers will also reduce the lifetime of the pump seal.

- ➔ The tubes of the wash option should always be filled with solvent to prolong the lifetime of the wash seal.
- ➔ Always use a mixture of LC grade water (90 %) and isopropanol (10 %) as wash solvent. This mixture prevents growth of algae or bacteria in the wash bottle and reduces the surface tension of the water.

When to Use the Seal Wash Option

Highly concentrated buffer solutions will reduce the lifetime of the seals and pistons in your pump. The seal wash option allows to maintain the seal lifetime by flushing the back side of the seal with a wash solvent.

The seal wash option is strongly recommended when buffer concentrations of 0.1 M or higher will be used for long time periods in the pump.

The active seal wash upgrade can be ordered as G1398A.

The seal wash option comprises a support ring, secondary seal, gasket and seal holder for both piston sides. A wash bottle filled with water /isopropanol (90/10) is placed above the pump in the solvent cabinet and the peristaltic pump moves a flow through the pump head removing all possible buffer crystals from the back of the pump seal.

NOTE

Running dry is the worst case for a wash seal and drastically reduces its lifetime.

The seal will build up sticky layers on the surface of the piston. These sticky layers will also reduce the lifetime of the pump seal. Therefore the tubes of the wash option should always be filled with solvent to prolong the lifetime of the wash seal. Always use a mixture of LC grade water (90 %) and isopropanol (10 %) as wash solvent. This mixture prevents growth of algae or bacteria in the wash bottle and reduces the surface tension of the water.

Choosing the Right Pump Seals

The standard seal for the pump can be used for most applications. However applications that use normal phase solvents (for example, hexane) are not suited for the standard seal and require a different seal when used for a longer time in the pump.

For applications that use normal phase solvents (for example, hexane) we recommend using polyethylene pump seals (PE seals (pack of 2) (p/n 0905-1420)) and Wash Seal PE (p/n 0905-1718). These seals have less abrasion compared to the standard seals.

NOTE Polyethylene seals have a limited pressure range of 0 – 200 bar. When used above 200 bar their lifetime is reduced significantly. *DO NOT* apply the seal wear-in procedure performed with new standard seals at 600 bar.

Optimize the Compressibility Compensation Setting

The compressibility compensation default setting is 100 × 10^{-6} /bar for the pump. This setting represents an average value. Under normal conditions the default setting reduces the pressure pulsation to values (below 1% of system pressure) that will be sufficient for most applications and for all gradient analyses. For applications using sensitive detectors, the compressibility settings can be optimized by using the values for the various solvents described in Table 19 on page 78. If the solvent in use is not listed in the compressibility tables, when using isocratic mixtures of solvents and if the default settings are not sufficient for your application the following procedure can be used to optimize the compressibility settings.

NOTE When using mixtures of solvents it is not possible to calculate the compressibility of the mixture by interpolating the compressibility values of the pure solvents used in that mixture or by applying any other calculation. In these cases the following empirical procedure has to be applied to optimize your compressibility setting.

1. Start the pump with the required flow rate.
2. Before starting the optimization procedure, the flow must be stable. Check the tightness of the system with the pressure test.
3. Your pump must be connected to a data system or Instant Pilot with which the pressure and %-ripple can be monitored, otherwhise connect a signal cable between the pressure output of the pump and a recording device (for example, 339X integrator) and set parameters.

   Zero 50 %

   Att 2^3 Chart

   Speed 10 cm/min
4. Start the recording device with the plot mode.
5. Starting with a compressibility setting of 10 × 10^{-6} /bar increase the value in steps of 10. Re-zero the integrator as required. The compressibility compensation setting that generates the smallest pressure ripple is the optimum value for your solvent composition.

Table 19 Solvent Compressibility

Solvent (pure)	Compressibility (10-6/bar)
Acetone	126
Acetonitrile	115
Benzene	95
Carbon tetrachloride	110
Chloroform	100
Cyclohexane	118
Ethanol	114
Ethyl acetate	104
Heptane	120
Hexane	150
Isobutanol	100
Isopropanol	100
Methanol	120
1-Propanol	100
Toluene	87
Water	46

6
Troubleshooting and Diagnostics

This chapter gives an overview about the troubleshooting and diagnostic features and the different user interfaces.

Overview of the Module's Indicators and Test Functions

Status Indicators

The module is provided with two status indicators which indicate the operational state (prerun, run, and error states) of the module. The status indicators provide a quick visual check of the operation of the module.

Error Messages

In the event of an electronic, mechanical or hydraulic failure, the module generates an error message in the user interface. For each message, a short description of the failure, a list of probable causes of the problem, and a list of suggested actions to fix the problem are provided (see chapter Error Information).

Test Functions

A series of test functions are available for troubleshooting and operational verification after exchanging internal components (see Tests and Calibrations).

System Pressure Test

The **System Pressure Test** is a quick test designed to determine the pressure tightness of the system. After exchanging flow path components (e.g. pump seals or injection seal), use this test to verify the system is pressure tight.

Leak Rate Test

The **Leak Rate Test** is a diagnostic test designed to determine the pressure tightness of the pump. When a problem with the pump is suspected, use this test to help troubleshoot the pump and its pumping performance.

Status Indicators

Two status indicators are located on the front of the module. The lower left indicates the power supply status, the upper right indicates the module status.

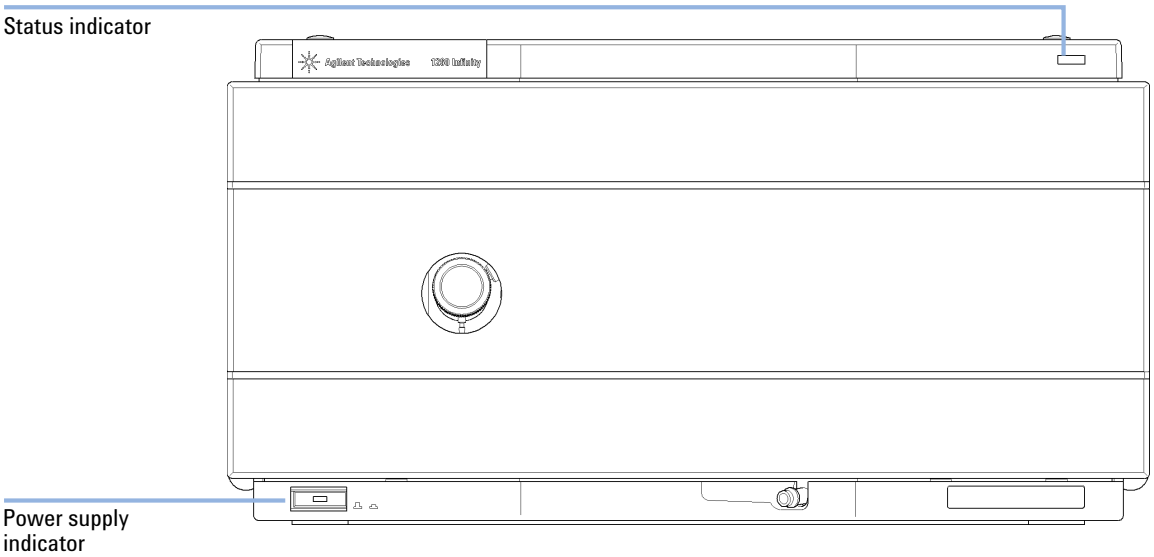

Figure 15 Location of Status Indicators

Power Supply Indicator

The power supply indicator is integrated into the main power switch. When the indicator is illuminated (*green*) the power is *ON*.

Module Status Indicator

The module status indicator indicates one of six possible module conditions:

- When the status indicator is *OFF* (and power switch light is on), the module is in a *prerun* condition, and is ready to begin an analysis.
- A *green* status indicator, indicates the module is performing an analysis (*run* mode).
- A *yellow* indicator indicates a *not-ready* condition. The module is in a not-ready state when it is waiting for a specific condition to be reached or completed (for example, immediately after changing a set point), or while a self-test procedure is running.
- An *error* condition is indicated when the status indicator is *red*. An error condition indicates the module has detected an internal problem which affects correct operation of the module. Usually, an error condition requires attention (e.g. leak, defective internal components). An error condition always interrupts the analysis.
- A *red-blinking* (modules with on-board LAN) or *yellow-blinking* (modules without on-board LAN) indicator indicates that the module is in resident mode (e.g. during update of main firmware).
- A *fast red-blinking* (modules with on-board LAN) or *fast yellow-blinking* (modules without on-board LAN) indicator indicates that the module is in boot loader mode (e.g. during update of main firmware). In such a case try to re-boot the module or try a cold-start.

User Interfaces

Depending on the user interface, the available tests vary. Some descriptions are only available in the service manual.

Table 20 Test functions available vs. user interface

Test	Instant Pilot G4208A	Agilent Lab Advisor
System Pressure Test	Yes	Yes
Leak Rate Test	No	Yes

Agilent Lab Advisor Software

The Agilent Lab Advisor software is a standalone product that can be used with or without data system. Agilent Lab Advisor software helps to manage the lab for high quality chromatographic results and can monitor in real time a single Agilent LC or all the Agilent GCs and LCs configured on the lab intranet.

Agilent Lab Advisor software provides diagnostic capabilities for all Agilent 1200 Infinity Series modules. This includes diagnostic capabilities, calibration procedures and maintenance routines for all the maintenance routines.

The Agilent Lab Advisor software also allows users to monitor the status of their LC instruments. The Early Maintenance Feedback (EMF) feature helps to carry out preventive maintenance. In addition, users can generate a status report for each individual LC instrument. The tests and diagnostic features as provided by the Agilent Lab Advisor software may differ from the descriptions in this manual. For details refer to the Agilent Lab Advisor software help files.

This manual provides lists with the names of Error Messages, Not Ready messages, and other common issues.

7
Error Information

This chapter describes the meaning of error messages, and provides information on probable causes and suggested actions how to recover from error conditions.

What Are Error Messages

Error messages are displayed in the user interface when an electronic, mechanical, or hydraulic (flow path) failure occurs which requires attention before the analysis can be continued (for example, repair, or exchange of consumables is necessary). In the event of such a failure, the red status indicator at the front of the module is switched on, and an entry is written into the module logbook.

General Error Messages

General error messages are generic to all Agilent series HPLC modules and may show up on other modules as well.

Timeout

The timeout threshold was exceeded.

Probable cause	Suggested actions
1 The analysis was completed successfully, and the timeout function switched off the module as requested.	Check the logbook for the occurrence and source of a not-ready condition. Restart the analysis where required.
2 A not-ready condition was present during a sequence or multiple-injection run for a period longer than the timeout threshold.	Check the logbook for the occurrence and source of a not-ready condition. Restart the analysis where required.

Shut-Down

An external instrument has generated a shut-down signal on the remote line.

The module continually monitors the remote input connectors for status signals. A LOW signal input on pin 4 of the remote connector generates the error message.

Probable cause	Suggested actions
1 Leak detected in another module with a CAN connection to the system.	Fix the leak in the external instrument before restarting the module.
2 Leak detected in an external instrument with a remote connection to the system.	Fix the leak in the external instrument before restarting the module.

Probable cause	Suggested actions
3 Shut-down in an external instrument with a remote connection to the system.	Check external instruments for a shut-down condition.
4 The degasser failed to generate sufficient vacuum for solvent degassing.	Check the vacuum degasser for an error condition. Refer to the *Service Manual* for the degasser or the 1260 pump that has the degasser built-in.

Remote Timeout

A not-ready condition is still present on the remote input. When an analysis is started, the system expects all not-ready conditions (for example, a not-ready condition during detector balance) to switch to run conditions within one minute of starting the analysis. If a not-ready condition is still present on the remote line after one minute the error message is generated.

Probable cause	Suggested actions
1 Not-ready condition in one of the instruments connected to the remote line.	Ensure the instrument showing the not-ready condition is installed correctly, and is set up correctly for analysis.
2 Defective remote cable.	Exchange the remote cable.
3 Defective components in the instrument showing the not-ready condition.	Check the instrument for defects (refer to the instrument's documentation).

Synchronization Lost

During an analysis, the internal synchronization or communication between one or more of the modules in the system has failed.

The system processors continually monitor the system configuration. If one or more of the modules is no longer recognized as being connected to the system, the error message is generated.

Probable cause	Suggested actions
1 CAN cable disconnected.	• Ensure all the CAN cables are connected correctly. • Ensure all CAN cables are installed correctly.
2 Defective CAN cable.	Exchange the CAN cable.
3 Defective main board in another module.	Switch off the system. Restart the system, and determine which module or modules are not recognized by the system.

Leak

A leak was detected in the module.

The signals from the two temperature sensors (leak sensor and board-mounted temperature-compensation sensor) are used by the leak algorithm to determine whether a leak is present. When a leak occurs, the leak sensor is cooled by the solvent. This changes the resistance of the leak sensor which is sensed by the leak-sensor circuit on the main board.

Probable cause	Suggested actions
1 Loose fittings.	Ensure all fittings are tight.
2 Broken capillary.	Exchange defective capillaries.
3 Loose or leaking purge valve, inlet valve, or outlet valve.	Ensure pump components are seated correctly. If there are still signs of a leak, exchange the appropriate seal (purge valve, inlet valve, outlet valve).
4 Defective pump seals.	Exchange the pump seals.

Leak Sensor Open

The leak sensor in the module has failed (open circuit).

The current through the leak sensor is dependent on temperature. A leak is detected when solvent cools the leak sensor, causing the leak-sensor current to change within defined limits. If the current falls outside the lower limit, the error message is generated.

Probable cause	Suggested actions
1 Leak sensor not connected to the main board.	Please contact your Agilent service representative.
2 Defective leak sensor.	Please contact your Agilent service representative.
3 Leak sensor incorrectly routed, being pinched by a metal component.	Please contact your Agilent service representative.

Leak Sensor Short

The leak sensor in the module has failed (short circuit).

The current through the leak sensor is dependent on temperature. A leak is detected when solvent cools the leak sensor, causing the leak-sensor current to change within defined limits. If the current increases above the upper limit, the error message is generated.

Probable cause	Suggested actions
1 Defective flow sensor.	Please contact your Agilent service representative.
2 Leak sensor incorrectly routed, being pinched by a metal component.	Please contact your Agilent service representative.

Compensation Sensor Open

The ambient-compensation sensor (NTC) on the main board in the module has failed (open circuit).

The resistance across the temperature compensation sensor (NTC) on the main board is dependent on ambient temperature. The change in resistance is used by the leak circuit to compensate for ambient temperature changes. If the resistance across the sensor increases above the upper limit, the error message is generated.

Probable cause	Suggested actions
1 Defective main board.	Please contact your Agilent service representative.

Compensation Sensor Short

The ambient-compensation sensor (NTC) on the main board in the module has failed (short circuit).

The resistance across the temperature compensation sensor (NTC) on the main board is dependent on ambient temperature. The change in resistance is used by the leak circuit to compensate for ambient temperature changes. If the resistance across the sensor falls below the lower limit, the error message is generated.

Probable cause	Suggested actions
1 Defective main board.	Please contact your Agilent service representative.

Fan Failed

The cooling fan in the module has failed.

The hall sensor on the fan shaft is used by the main board to monitor the fan speed. If the fan speed falls below a certain limit for a certain length of time, the error message is generated.

This limit is given by 2 revolutions/second for longer than 5 seconds.

Probable cause	Suggested actions
1 Fan cable disconnected.	Please contact your Agilent service representative.
2 Defective fan.	Please contact your Agilent service representative.
3 Defective main board.	Please contact your Agilent service representative.
4 Improperly positioned cables or wires obstructing fan blades.	Ensure the fan is not mechanically blocked.

Open Cover

The top foam has been removed.

The sensor on the main board detects when the top foam is in place. If the foam is removed, the fan is switched off, and the error message is generated.

Probable cause	Suggested actions
1 The top foam was removed during operation.	Reinstall the top foam.
2 Foam not activating the sensor.	Please contact your Agilent service representative.
3 Dirty or defective sensor.	Please contact your Agilent service representative.
4 Rear of the module is exposed to strong direct sunlight.	Ensure that the rear of module is not directly exposed to strong sunlight.

Module Error Messages

These errors are pump specific.

Restart Without Cover

The module was restarted with the top cover and foam open.

The sensor on the main board detects when the top foam is in place. If the module is restarted with the foam removed, the module switches off within 30 s, and the error message is generated.

Probable cause	Suggested actions
1 The module started with the top cover and foam removed.	Please contact your Agilent service representative.
2 Rear of the module is exposed to strong direct sunlight.	Ensure that the rear of module is not directly exposed to strong sunlight.

Solvent Zero Counter

Pump firmware version A.02.32 and higher allow to set solvent bottle fillings in the data system. If the volume level in the bottle falls below the specified value the error message appears when the feature is configured accordingly.

Probable cause	Suggested actions
1 Volume in bottle below specified volume.	Refill bottles and reset solvent counters.
2 Incorrect setting.	Make sure the limits are set correctly.

Pressure Above Upper Limit

The system pressure has exceeded the upper pressure limit.

Probable cause	Suggested actions
1 Upper pressure limit set too low.	Ensure the upper pressure limit is set to a value suitable for the analysis.
2 Blockage in the flowpath (after the damper).	Check for blockage in the flowpath. The following components are particularly subject to blockage: inline filter frit, needle (autosampler), seat capillary (autosampler), sample loop (autosampler), column frits and capillaries with small internal diameters (e.g. 50 µm ID).
3 Defective damper.	Please contact your Agilent service representative.
4 Defective main board.	Please contact your Agilent service representative.

Pressure Below Lower Limit

The system pressure has fallen below the lower pressure limit.

Probable cause	Suggested actions
1 Lower pressure limit set too high.	Ensure the lower pressure limit is set to a value suitable for the analysis.
2 Air bubbles in the mobile phase.	• Ensure solvents are degassed. Purge the module. • Ensure solvent inlet filters are not blocked.
3 Leak.	• Inspect the pump head, capillaries and fittings for signs of a leak. • Purge the module. Run a pressure test to determine whether the seals or other module components are defective.

Probable cause	Suggested actions
4 Defective damper.	Please contact your Agilent service representative.
5 Defective main board.	Please contact your Agilent service representative.

Pressure Signal Missing

The pressure signal of the damper is missing.

The pressure signal of the damper must be within a specific voltage range. If the pressure signal is missing, the processor detects a voltage of approximately -120mV across the damper connector.

Probable cause	Suggested actions
1 Damper disconnected.	Please contact your Agilent service representative.
2 Defective damper.	Please contact your Agilent service representative.

Missing Pressure Reading

The pressure readings read by the pump ADC (analog-digital converter) are missing.

The ADC reads the pressure signal of from the damper every 1ms. If the readings are missing for longer than 10 seconds, the error message is generated.

Probable cause	Suggested actions
1 Damper disconnected.	Please contact your Agilent service representative.
2 Defective damper.	Please contact your Agilent service representative.
3 Defective main board.	Please contact your Agilent service representative.

Pump Configuration

At switch-on, the quaternary pump has recognized a new pump configuration.

The quaternary pump is assigned its configuration at the factory. If the gradient valve is disconnected, and the quaternary pump is rebooted, the error message is generated. However, the pump will function as an isocratic pump in this configuration.The error message reappears after each switch-on.

Probable cause	Suggested actions
1 Gradient valve disconnected.	Reconnect the gradient valve.

Valve Fuse

Valve Fuse 0: Channels A and B

Valve Fuse 1: Channels C and D

The gradient valve in the quaternary pump has drawn excessive current causing the electronic fuse to open.

Probable cause	Suggested actions
1 Defective gradient valve.	Restart the quaternary pump. If the error message appears again, exchange the gradient valve.
2 Defective connection cable (front panel to main board).	Please contact your Agilent service representative.
3 Defective main board.	Please contact your Agilent service representative.

Inlet-Valve Fuse

The active-inlet valve in the module has drawn excessive current causing the inlet-valve electronic fuse to open.

Probable cause	Suggested actions
1 Defective active inlet valve.	Restart the module. If the error message appears again, exchange the active inlet valve.
2 Defective connection cable (front panel to main board).	Please contact your Agilent service representative.
3 Defective main board.	Please contact your Agilent service representative.

Valve Failed (MCGV/SSV)

Valve 0 Failed: valve A

Valve 1 Failed: valve B

Valve 2 Failed: valve C

Valve 3 Failed: valve D

One of the valves of the multi-channel gradient valve has failed to switch correctly.

The processor monitors the valve voltage before and after each switching cycle. If the voltages are outside expected limits, the error message is generated.

Probable cause	Suggested actions
1 Gradient valve disconnected.	Ensure the gradient valve is connected correctly.
2 Connection cable (inside instrument) not connected.	Please contact your Agilent service representative.

Probable cause	Suggested actions
3 Connection cable (inside instrument) defective.	Please contact your Agilent service representative.
4 Gradient valve defective.	Exchange the gradient valve.

Motor-Drive Power

The current drawn by the pump motor exceeded the maximum limit.

Blockages in the flow path are usually detected by the pressure sensor in the damper, which result in the pump switching off when the upper pressure limit is exceeded. If a blockage occurs before the damper, the pressure increase cannot be detected by the pressure sensor and the module will continue to pump. As pressure increases, the pump drive draws more current. When the current reaches the maximum limit, the module is switched off, and the error message is generated.

Probable cause	Suggested actions
1 Flow path blockage in front of the damper.	Ensure the capillaries and frits between the pump head and damper inlet are free from blockage.
2 Blocked passive inlet valve.	Exchange the passive inlet valve.
3 Blocked outlet valve.	Exchange the outlet valve.
4 High friction (partial mechanical blockage) in the pump drive assembly.	Remove the pump-head assembly. Ensure there is no mechanical blockage of the pump-head assembly or pump drive assembly.
5 Defective pump drive assembly.	Please contact your Agilent service representative.
6 Defective main board.	Please contact your Agilent service representative.

Encoder Missing

The optical encoder on the pump motor in the module is missing or defective.

The processor checks the presence of the pump encoder connector every 2 seconds. If the connector is not detected by the processor, the error message is generated.

Probable cause	Suggested actions
1 Defective or disconnected pump encoder connector.	Please contact your Agilent service representative.
2 Defective pump drive assembly.	Please contact your Agilent service representative.

Inlet-Valve Missing

The active-inlet valve in the module is missing or defective.

The processor checks the presence of the active-inlet valve connector every 2 seconds. If the connector is not detected by the processor, the error message is generated.

Probable cause	Suggested actions
1 Disconnected or defective cable.	Please contact your Agilent service representative.
2 Disconnected or defective connection cable (front panel to main board).	Please contact your Agilent service representative.
3 Defective active inlet valve.	Exchange the active inlet valve.

Temperature Out of Range

The temperature sensor readings in the motor-drive circuit are out of range.

The values supplied to the ADC by the hybrid sensors must be between 0.5 V and 4.3 V. If the values are outside this range, the error message is generated.

Probable cause	Suggested actions
1 Defective main board.	Please contact your Agilent service representative.

Temperature Limit Exceeded

The temperature of one of the motor-drive circuits is too high.

The processor continually monitors the temperature of the drive circuits on the main board. If excessive current is being drawn for long periods, the temperature of the circuits increases. If the temperature exceeds the upper limit, the error message is generated.

Probable cause	Suggested actions
1 High friction (partial mechanical blockage) in the pump drive assembly.	Ensure the capillaries and frits between the pump head and damper inlet are free from blockage.
2 Partial blockage of the flowpath in front of the damper.	Ensure the outlet valve is not blocked.
3 Defective pump drive assembly.	Please contact your Agilent service representative.
4 Defective main board.	Please contact your Agilent service representative.

Servo Restart Failed

The pump motor in the module was unable to move into the correct position for restarting.

When the module is switched on, the first step is to switch on the C phase of the variable reluctance motor. The rotor should move to one of the C positions. The C position is required for the servo to be able to take control of the phase sequencing with the commutator. If the rotor is unable to move, or if the C position cannot be reached, the error message is generated.

Probable cause	Suggested actions
1 Disconnected or defective cable.	Please contact your Agilent service representative.
2 Blocked passive inlet valve.	Exchange the inlet valve.
3 Mechanical blockage of the module.	Remove the pump-head assembly. Ensure there is no mechanical blockage of the pump-head assembly or pump drive assembly.
4 Defective pump drive assembly.	Please contact your Agilent service representative.
5 Defective main board.	Please contact your Agilent service representative.

Pump Head Missing

The pump-head end stop in the pump was not found.

When the pump restarts, the metering drive moves forward to the mechanical end stop. Normally, the end stop is reached within 20 seconds, indicated by an increase in motor current. If the end point is not found within 20 seconds, the error message is generated.

Probable cause	Suggested actions
1 Pump head not installed correctly (screws not secured, or pump head not seated correctly).	Install the pump head correctly. Ensure nothing (e.g. capillary) is trapped between the pump head and body.
2 Broken piston.	Exchange the piston.

Index Limit

The time required by the piston to reach the encoder index position was too short (pump).

During initialization, the first piston is moved to the mechanical stop. After reaching the mechanical stop, the piston reverses direction until the encoder index position is reached. If the index position is reached too fast, the error message is generated.

Probable cause	Suggested actions
1 Irregular or sticking drive movement.	Remove the pump head, and examine the seals, pistons, and internal components for signs of wear, contamination or damage. Exchange components as required.
2 Defective pump drive assembly.	Please contact your Agilent service representative.

Index Adjustment

The encoder index position in the module is out of adjustment.

During initialization, the first piston is moved to the mechanical stop. After reaching the mechanical stop, the piston reverses direction until the encoder index position is reached. If the time to reach the index position is too long, the error message is generated.

Probable cause	Suggested actions
1 Irregular or sticking drive movement.	Remove the pump head, and examine the seals, pistons, and internal components for signs of wear, contamination or damage. Exchange components as required.
2 Defective pump drive assembly.	Please contact your Agilent service representative.

Index Missing

The encoder index position in the module was not found during initialization.

During initialization, the first piston is moved to the mechanical stop. After reaching the mechanical stop, the piston reverses direction until the encoder index position is reached. If the index position is not recognized within a defined time, the error message is generated.

Probable cause	Suggested actions
1 Disconnected or defective encoder cable.	Please contact your Agilent service representative.
2 Defective pump drive assembly.	Please contact your Agilent service representative.

Stroke Length

The distance between the lower piston position and the upper mechanical stop is out of limits (pump).

During initialization, the module monitors the drive current. If the piston reaches the upper mechanical stop position before expected, the motor current increases as the module attempts to drive the piston beyond the mechanical stop. This current increase causes the error message to be generated.

Probable cause	Suggested actions
1 Defective pump drive assembly.	Please contact your Agilent service representative.

Initialization Failed

The module failed to initialize successfully within the maximum time window.

A maximum time is assigned for the complete pump-initialization cycle. If the time is exceeded before initialization is complete, the error message is generated.

Probable cause	Suggested actions
1 Blocked passive inlet valve.	Exchange the inlet valve.
2 Defective pump drive assembly.	Please contact your Agilent service representative.
3 Defective main board.	Please contact your Agilent service representative.

Wait Timeout

When running certain tests in the diagnostics mode or other special applications, the pump must wait for the pistons to reach a specific position, or must wait for a certain pressure or flow to be reached. Each action or state must be completed within the timeout period, otherwise the error message is generated.

Possible Reasons for a Wait Timeout:

· Pressure not reached.

· Pump channel A did not reach the delivery phase.

· Pump channel B did not reach the delivery phase.

· Pump channel A did not reach the take-in phase.

· Pump channel B did not reach the take-in phase.

· Solvent volume not delivered within the specified time.

Probable cause	Suggested actions
1 Purge valve open.	Ensure that purge valve is closed.
2 Leak at fittings, purge valve, active inlet valve, outlet valve or piston seals.	Ensure pump components are seated correctly. If there are still signs of a leak, exchange the appropriate seal (purge valve, active inlet valve, outlet valve, piston seal).
3 Flow changed after starting test.	Ensure correct operating condition for the special application in use.
4 Defective pump drive assembly.	Please contact your Agilent service representative.

Degasser: cannot read signal

The pump board gets no or wrong pressure signals from the built-in degasser.

Probable cause	Suggested actions
1 Degasser board defect, missing or not connected to the pump main board.	Please contact your Agilent service representative.
2 Degasser sensor defect or not connected to degasser board	Please contact your Agilent service representative.

Degasser: limit not reached

This error is thrown, if the degasser does not become ready after 8 min, i.e. is higher than 180 mbar.

Probable cause	Suggested actions
1 Liquid in degasser tubing.	Please contact your Agilent service representative.
2 Leak in degasser tubing or chamber.	Please contact your Agilent service representative.
3 Degasser vacuum pump defect.	Please contact your Agilent service representative.

8
Test Functions and Calibration

This chapter describes the tests for the module.

Introduction

All tests are described based on the Agilent Lab Advisor Software B.01.03. Other user interfaces may not provide any test or just a few.

For details on the use of the interface refer to the interface documentation.

Table 21 Interfaces and available test functions

Interface	Comment	Available Function
Agilent Instrument Utilities		**System Pressure Test**
Agilent Lab Advisor	All tests are available	• **System Pressure Test** • **Leak Rate Test**
Agilent ChemStation	No tests available	
Agilent Instant Pilot		**System Pressure Test**

System Pressure Test

Description

The **System Pressure Test** is a quick, built-in test designed to demonstrate the pressure-tightness of the system. The test is required, if problems with small leaks are suspected, or after maintenance of flow-path components (e.g., pump seals, injection seal) to prove pressure tightness up to 600 bar.

For running the test, please refer to the online help of the diagnostic software.

System Pressure Test failed

The test will fail, if the sum of all leaks in the system (pump, autosampler or column compartment and connections) exceeds the test limit. After isolating and fixing the cause of the leak, repeat the **System Pressure Test** to confirm the system is pressure tight.

Probable cause	Suggested actions
1 Purge valve open.	Close the purge valve.
2 Loose or leaky fittings.	Tighten the fitting or exchange the capillary.
3 Pump: Damaged pump seals or pistons.	Run the **Leak Rate Test** to confirm the leak.
4 Loose purge valve.	Tighten the purge valve nut (14 mm wrench).
5 Autosampler: Loose or leaky fitting.	Tighten or exchange the fitting or capillary.
6 Autosampler: Rotor seal (injection valve).	Exchange the rotor seal.
7 Autosampler: Damaged metering seal or piston.	Exchange the metering seal. Check the piston for scratches. Exchange the piston if required.
8 Autosampler: Needle seat.	Exchange the needle seat.
9 Column compartment: Loose or leaky fitting.	Tighten or exchange the fitting or capillary.
10 Column compartment: Rotor seal (column switching valve).	Exchange the rotor seal.

Leak Rate Test

Leak Rate Test Description

The **Leak Rate Test** is a built-in troubleshooting test designed to demonstrate the leak-tightness of the pump. For running the **Leak Rate Test** and evaluating test results, please refer to the online help of LabAdvisor.

9 Maintenance

This chapter describes the maintenance of the module.

Introduction to Maintenance and Repair

The module is designed for easy repair. The most frequent repairs such as piston seal change and purge valve frit change can be done from the front of the module with the module in place in the system stack.

These repairs are described in “Overview of Maintenance” on page 119.

Warnings and Cautions

WARNING

Toxic, flammable and hazardous solvents, samples and reagents

The handling of solvents, samples and reagents can hold health and safety risks.

- ➔ When working with these substances observe appropriate safety procedures (for example by wearing goggles, safety gloves and protective clothing) as described in the material handling and safety data sheet supplied by the vendor and follow good laboratory practice.
- ➔ The amount of substances should be reduced to the minimal volume required for the analysis.
- ➔ Do not operate the instrument in an explosive atmosphere.

WARNING

Electrical shock

Repair work at the module can lead to personal injuries, e.g. shock hazard, when the cover is opened.

- ➔ Do not remove the metal top cover of the module. No serviceable parts inside.
- ➔ Only certified persons are authorized to carry out repairs inside the module.

WARNING

Personal injury or damage to the product

Agilent is not responsible for any damages caused, in whole or in part, by improper use of the products, unauthorized alterations, adjustments or modifications to the products, failure to comply with procedures in Agilent product user guides, or use of the products in violation of applicable laws, rules or regulations.

- ➔ Use your Agilent products only in the manner described in the Agilent product user guides.

CAUTION Safety standards for external equipment

→ If you connect external equipment to the instrument, make sure that you only use accessory units tested and approved according to the safety standards appropriate for the type of external equipment.

Overview of Maintenance

The following pages describe maintenance (simple repairs) of the pump that can be carried out without opening the main cover.

Table 22 Simple Repair Procedures

Procedure	Typical Frequency	Notes
"Checking and Cleaning the Solvent Filter" on page 121	If solvent filter is blocked	Gradient performance problems, intermittent pressure fluctuations
"Exchanging the Passive Inlet Valve (PIV)" on page 123	If internally leaking	Pressure ripple unstable, run **Leak Rate Test** for verification
"Exchanging the Outlet Valve" on page 124	If internally leaking	Pressure ripple unstable, run **Leak Rate Test** for verification
"Exchanging the Purge Valve Frit or the Purge Valve" on page 126	If internally leaking	Solvent dripping out of waste outlet when valve closed
"Exchanging the Purge Valve Frit or the Purge Valve" on page 126	If the frit shows indication of contamination or blockage	A pressure drop of > 10 bar across the frit (5 mL/min H_2O with purge open) indicates blockage
"Maintenance of a Pump Head Without Seal Wash Option" on page 130	If pump performance indicates seal wear	Leaks at lower pump head side, unstable retention times, pressure ripple unstable — run **Leak Rate Test** for verification
Exchanging pistons, see "Maintenance of a Pump Head Without Seal Wash Option" on page 130	If scratched	Seal life time shorter than normally expected — check pistons while changing the seals
"Exchanging the Optional Interface Board" on page 143	If defective	Error condition, indicated by red status indicator

Cleaning the Module

The module case should be kept clean. Cleaning should be done with a soft cloth slightly dampened with water or a solution of water and mild detergent. Do not use an excessively damp cloth as liquid may drip into the module.

WARNING

Liquid dripping into the electronic compartment of your module.

Liquid in the module electronics can cause shock hazard and damage the module.

→ Do not use an excessively damp cloth during cleaning.

→ Drain all solvent lines before opening any fittings.

Checking and Cleaning the Solvent Filter

CAUTION

Small particles can permanently block the capillaries and valves of the module.

Damage of the module.

➔ Always filter solvents.

➔ Never use the module without solvent inlet filter.

NOTE

If the filter is in good condition the solvent will freely drip out of the solvent tube (hydrostatic pressure). If the solvent filter is partly blocked only very little solvent will drip out of the solvent tube.

Cleaning the Solvent Filter

When If solvent filter is blocked

Parts required

Description
Concentrated nitric acid (35 %)
LC grade water
Beaker

Preparations Remove solvent inlet tube from the adapter at the inlet valve.

1. Remove the blocked solvent filter from the bottle-head assembly and place it in a beaker with concentrated nitric acid (35%) for one hour.
2. Thoroughly flush the filter with LC grade water (remove all nitric acid, some columns can be damaged by concentrated nitric acid).
3. Reinstall the filter.

Exchanging the Passive Inlet Valve (PIV)

When If internally leaking (backflow)

Tools required
- Wrench 14 mm
- Pair of Tweezers

Parts required

#	Description
G1312-60066	Passive inlet valve

1. Remove the front cover.
2. Disconnect the solvent inlet tube from the inlet valve (be aware that solvent may leak out of the tube due to hydrostatic flow).
3. Using a 14 mm wrench loosen the passive inlet valve and remove the valve from the pump head.

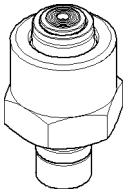

Figure 16 Passive Inlet Valve

4. Insert the new valve into the pump head. Using the 14 mm wrench turn the nut until it is hand tight.
5. Using the 14 mm wrench tighten the nut by turning the valve in its final position (not more than a quarter turn).
6. Reconnect the solvent inlet tube to the passive inlet valve.
7. Reinstall the front cover.

Exchanging the Outlet Valve

When If internally leaking

Tools required Wrench 1/4 inch
Wrench 14 mm

Parts required

#	Description
G1312-60067	Outlet valve, complete

Preparations
- Switch off pump at the main power switch
- Remove the front cover

NOTE Before exchanging the outlet valve you can try to clean it in a sonic bath for 5 – 10 min. Place the valve in an upright position in a small beaker with alcohol.

1 Using a 1/4 inch wrench disconnect the valve capillary from the outlet valve. **2** Using the 14 mm wrench loosen the valve and remove it from the pump body.	**3** Check that the new valve is assembled correctly. 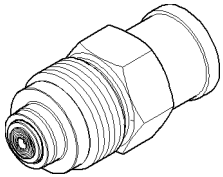

4 Reinstall the outlet valve and tighten the valve.	**5** Reconnect the valve capillary. 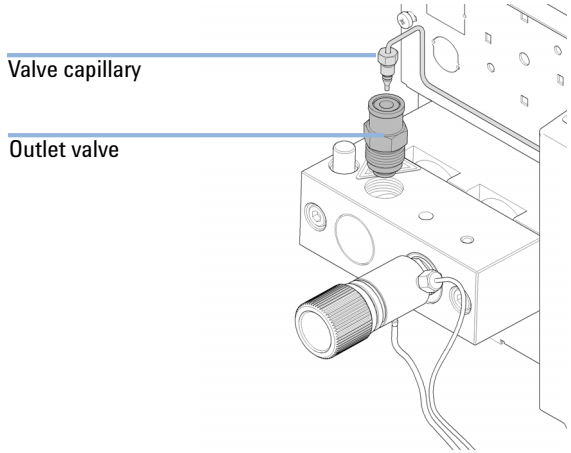

Exchanging the Purge Valve Frit or the Purge Valve

When

- Frit – when piston seals are exchanged or when contaminated or blocked (pressure drop of > 10 bar across the frit at a flow rate of 5 mL/min of H_20 with purge valve opened)
- Purge valve – if internally leaking

Tools required

- Wrench 1/4 inch
- Wrench 14 mm
- Pair of tweezers or toothpick

Parts required

#	p/n	Description
1	01018-22707	PTFE frit (pack of 5)
1	G1311-60009	Purge valve
1	5067-4728	Seal cap (optional)

(optional)

Preparations

- Switch off pump at the main power switch
- Remove the front cover
- Use a solvent shutoff valve or lift up solvent filters for avoiding leakages.

1 Using a 1/4 inch wrench disconnect the pump outlet capillary at the purge valve.

2 Disconnect the waste tube. Beware of leaking solvents due to hydrostatic pressure.

3 Using the 14 mm wrench unscrew the purge valve and remove it.

4 Remove the seal cap from the purge valve.

5 Using a pair of tweezers or a toothpick remove the frit.

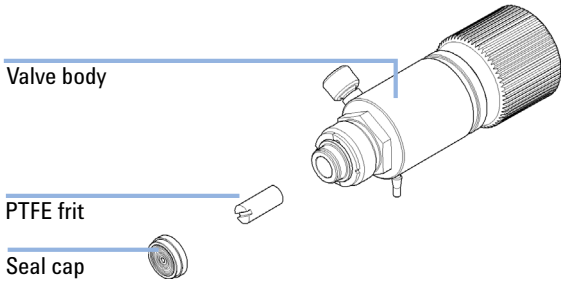

NOTE

Before reinstallation always check the gold seal in the seal cap. A deformed seal cap should be exchanged.

6 Place a new frit into the purge valve with the orientation of the frit as shown above. **7** Reinstall the cap with the gold seal.	**8** Insert the purge valve into the pump head and locate the pump outlet capillary and the waste tube. 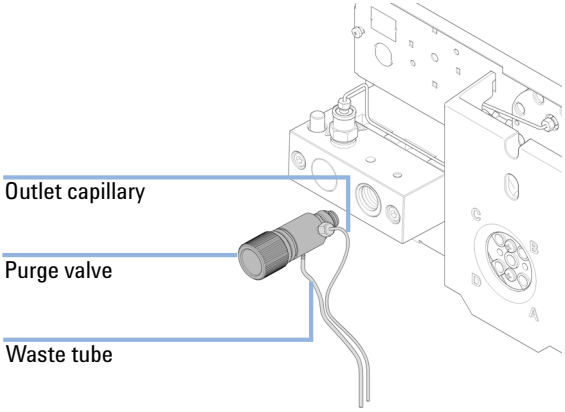
9 Tighten the purge valve and reconnect outlet capillary and waste tubing.	

Removing the Pump Head Assembly

When

- Exchanging the seals
- Exchanging the pistons
- Exchanging seals of the seal wash option

Tools required

- Wrench 1/4 inch
- 4-mm hexagonal key

Preparations

- Switch off pump at the main power switch and unplug the power cable
- Use a solvent shutoff valve or lift up solvent filters for avoiding leakages

CAUTION

Damage of the pump drive

Starting the pump when the pump head is removed may damage the pump drive.

➔ Never start the pump when the pump head is removed.

1 Remove the front cover.

2 If an active inlet valve is installed, disconnect the active inlet valve cable.

3 Using a 1/4 inch wrench remove the outlet capillary.

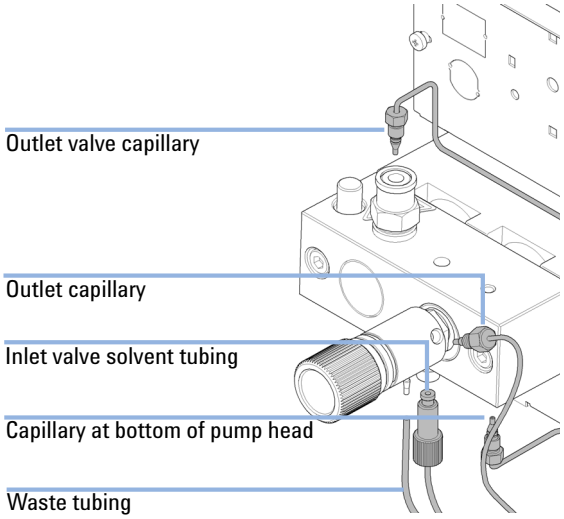

Next Steps: **4** Disconnect the capillary from the outlet valve. **5** Remove the waste tubing and disconnect the solvent tubing from the inlet valve. **6** Remove the capillary at the bottom of the pump head.	**7** Using a 4 mm hexagonal key, stepwise loosen the two pump head screws and remove the pump head from the pump drive. 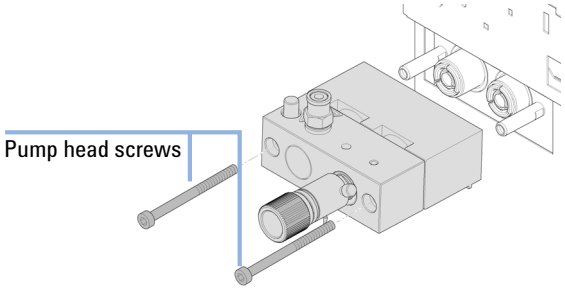

Maintenance of a Pump Head Without Seal Wash Option

When

In case of maintenance or pump head internal leaks.

Tools required

- Wrench 1/4 inch
- 4-mm hexagonal key

Parts required

#	p/n	Description
1	01018-23702	Insert tool
1	5063-6589	Standard seals (pack of 2)
1	or	
1	0905-1420	PE seals (pack of 2)
1	5063-6586	Piston

Preparations

- Switch off pump at the main power switch
- Remove the front cover
- "Removing the Pump Head Assembly" on page 128

1 Place the pump head on a flat surface. Loosen the lock screw (two revolutions) and while holding the lower half of the assembly carefully pull the pump head away from the piston housing.

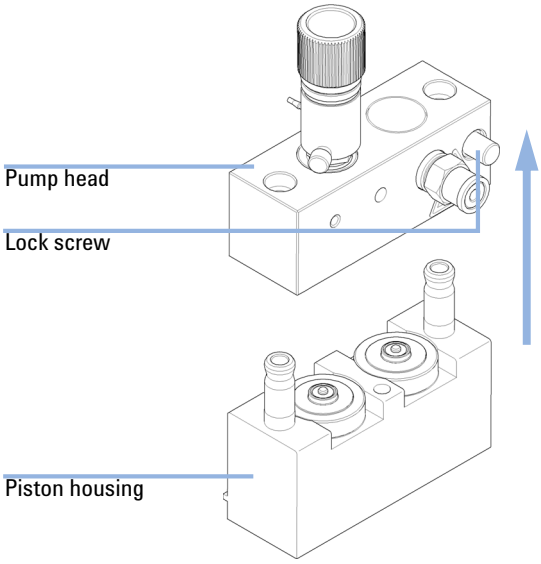

2 Remove the support rings from the piston housing and lift the housing away from the pistons.

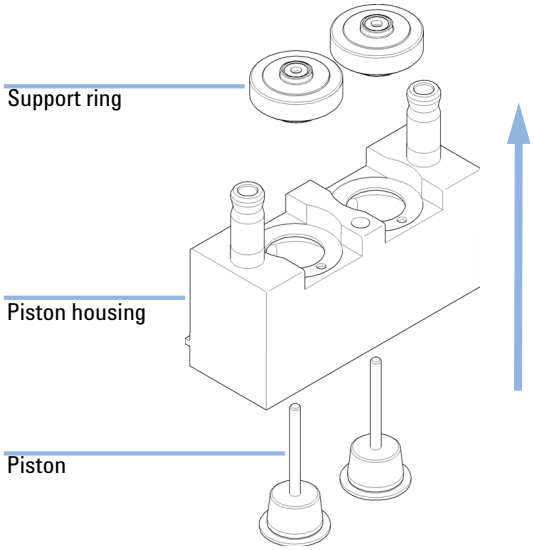

3 Check the piston surface and remove any deposits or layers. Cleaning can be done with alcohol or tooth paste. Replace piston if scratched.

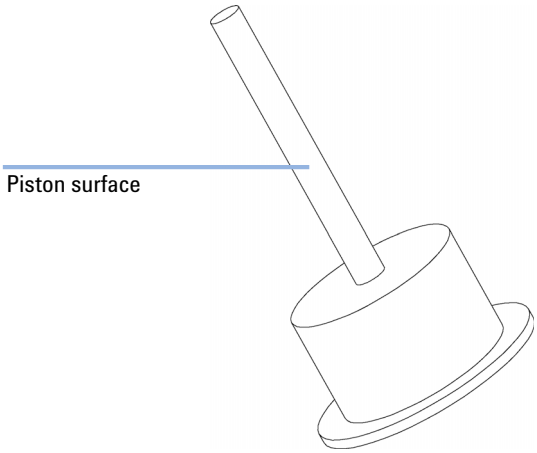

4 Using the insert tool carefully remove the seal from the pump head. Remove wear retainers, if still present.

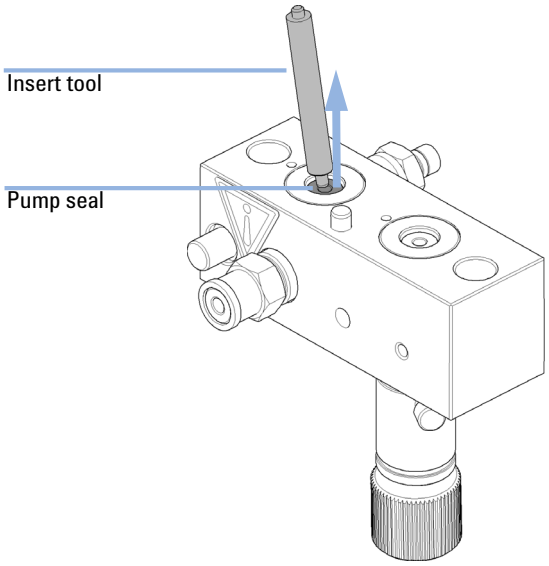

5 Insert new seals into the pump head.

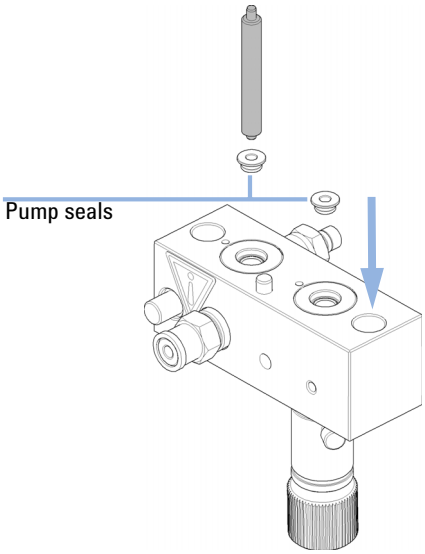

6 Reassemble the pump head assembly.

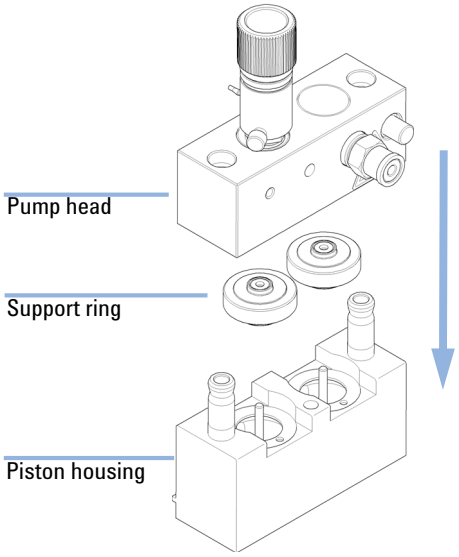

Next Steps:

7 If a standard seal has been installed, run the seal wear-in procedure, see "Seal Wear-in Procedure" on page 134.

8 For the normal phase seal, the purge valve frit should be replaced, see "Exchanging the Purge Valve Frit or the Purge Valve" on page 126.

Seal Wear-in Procedure

Parts required

#	Description
0100-1847	Adapter AIV to solvent inlet tubes
5022-2159	Restriction capillary

CAUTION

Seal damage

➔ This procedure is required for Standard seals (pack of 2) (p/n 5063-6589), but it will damage the PE seals (pack of 2) (p/n 0905-1420).

1. Place a bottle with 100 mL of isopropanol in the solvent cabinet and place a tubing (including bottle head assembly) in the bottle.
2. If an AIV is installed, screw the Adapter AIV to solvent inlet tubes (p/n 0100-1847) to the AIV and connect the inlet tube from the bottle head directly to it.
3. Connect the restriction capillary (5022-2159) to the purge valve. Insert its other end into a waste container.
4. Open the purge valve and purge the system for 5 minutes with isopropanol at a flow rate of 2 mL/min.
5. Close the purge valve, set the flow to a rate adequate to achieve a pressure of 350 bar. Pump 15 min at this pressure to wear in the seals. The pressure can be monitored using your instrument control software or tool.
6. Turn OFF the pump, slowly open the purge valve to release the pressure from the system, disconnect the restriction capillary and reinstall the bottle with the solvent for your application.
7. Rinse your system with the solvent used for your next application.
8. Replace the purge valve frit, see “Exchanging the Purge Valve Frit or the Purge Valve” on page 126.

Maintenance of a Pump Head with Seal Wash Option

When

When maintaining seal wash option

Tools required

- 4-mm hexagonal key

Parts required

#	p/n	Description
1	01018-23702	Insert tool
1	0905-1175	Wash seal
1	5062-2484	Gasket, seal wash (pack of 6)

Preparations

- Switch off pump at the main power switch
- Remove the front cover
- Use a solvent shutoff valve or lift up solvent filters for avoiding leakages
- Remove the pump head, see "Removing the Pump Head Assembly" on page 128
- Remove the wash solvent tubings from the support ring inlet and outlet

1 Remove the seal holder and the seal wash support rings from the piston housing. Remove the seal holder from the support ring assembly.

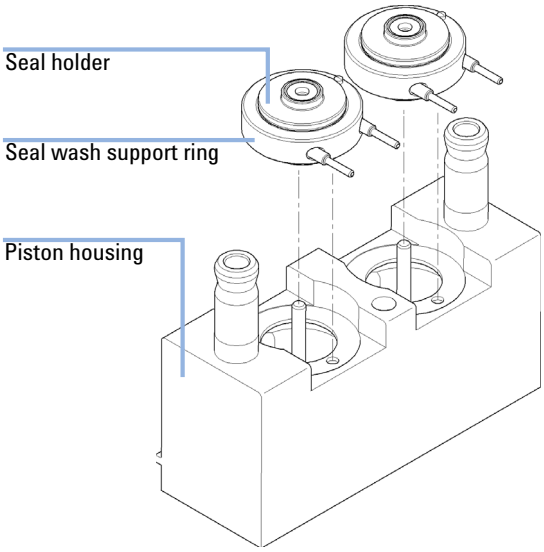

2 Using the blade of a flat-blade screwdriver remove the seal wash gasket and the secondary seal from the support ring. The removed seal will be damaged and cannot be re-used!

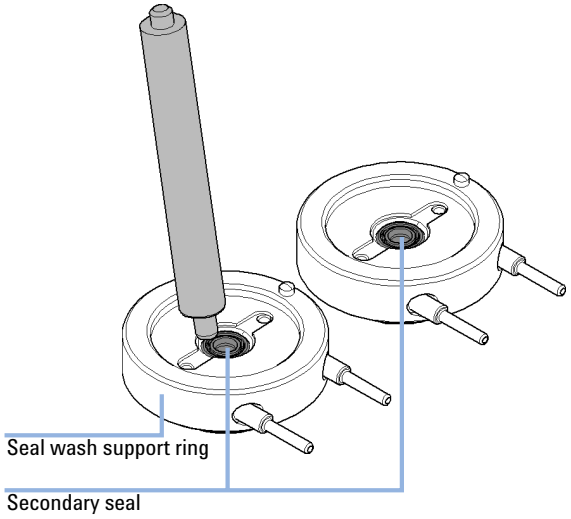

3 Using the insert tool press the wash seal (spring pointing upwards) into the recess of the support ring.

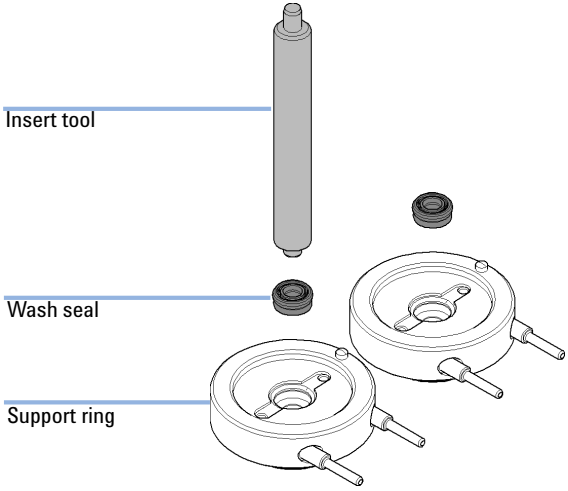

4 Place a seal wash gasket in the recess of the support ring. Put the seal holder on top of the gasket.

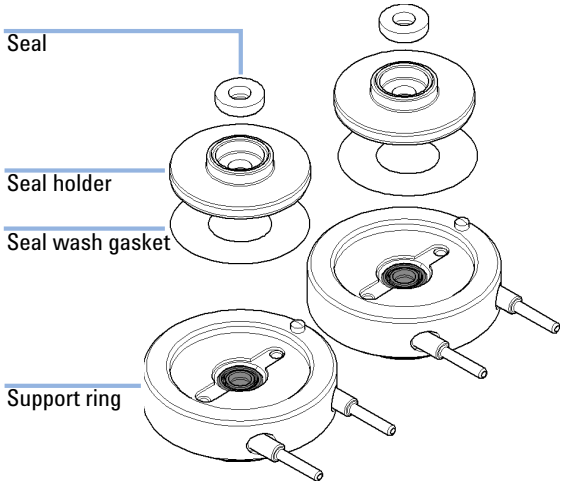

5 Place the support rings on the piston housing (pistons not installed) and snap the pump head and piston housing together.

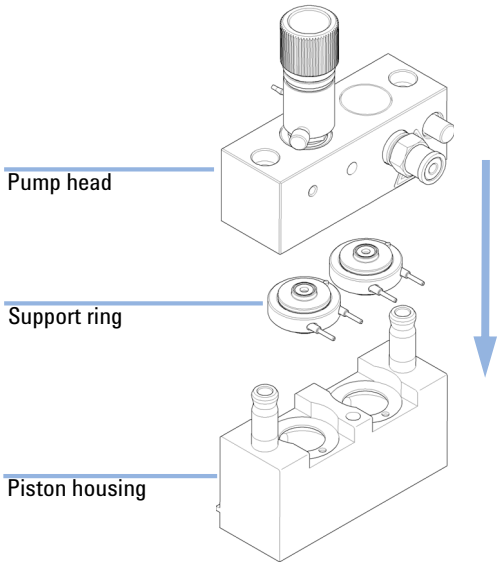

6 Insert the pistons and carefully press them into the seal.

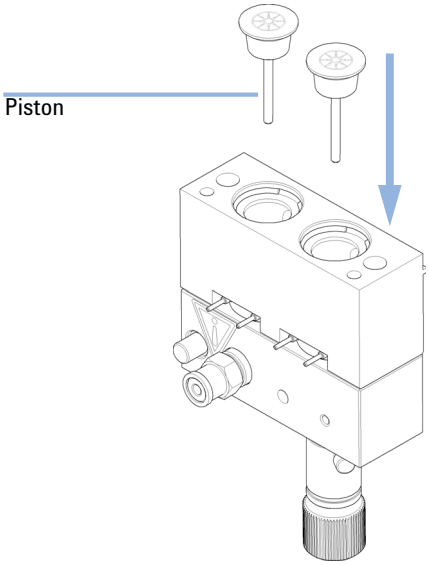

7 Tighten the lock screw.

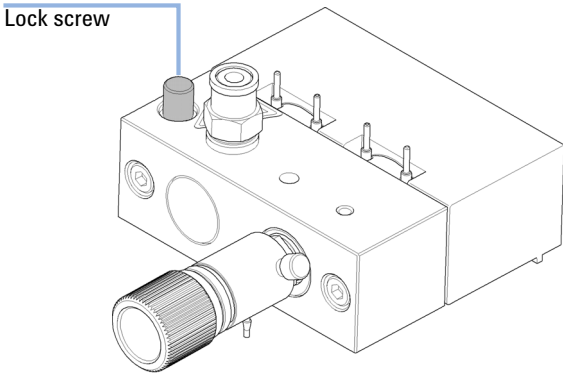

Reinstalling the Pump Head Assembly

When When reassembling the pump

Tools required
- 4-mm hexagonal key

Parts required

#	Description
79846-65501	Pump head grease

1 Apply a small amount of grease on the back of the pistons.	**2** Slide the pump head assembly onto the pump drive. 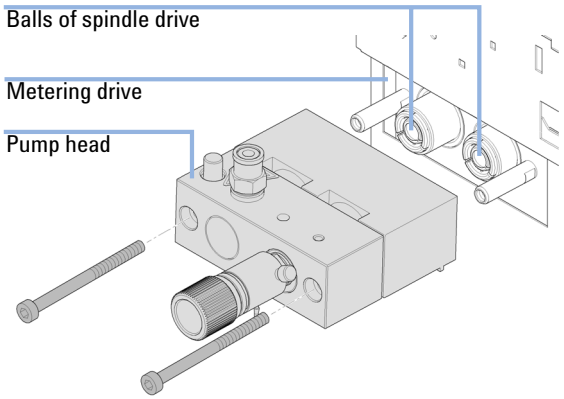

3 Using a 4 mm hexagonal key tighten the pump head screws stepwise with increasing torque. 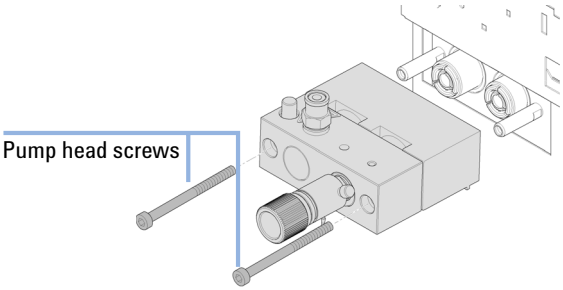 	**4** Reconnect all capillaries, tubes and (if installed) the active inlet valve cable to its connector. 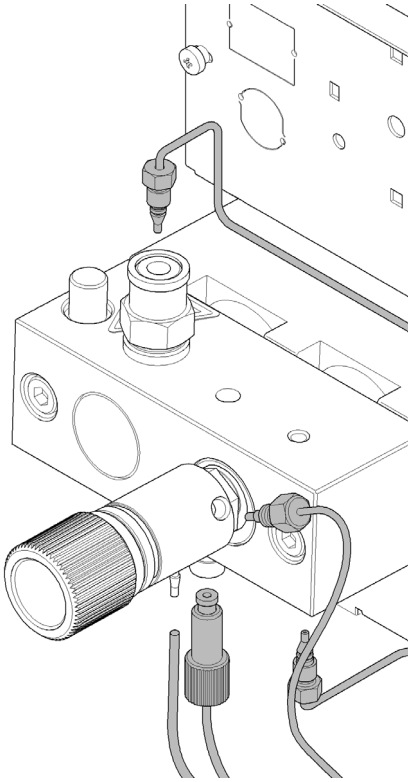
5 Reinstall the front cover.	

Exchanging the Multi-Channel Gradient Valve (MCGV)

Tools required Screwdriver Pozidriv #1

Parts required

#	p/n	Description
1	G1311-69701	MCGV (exchange assembly)

Preparations

- Switch off pump at the main power switch
- Remove the front cover
- Use a solvent shutoff valve or lift up solvent filters for avoiding leakages.

NOTE

The life time of the multi-channel gradient valve can be increased by regularly flushing the valve, especially when using buffers. If using buffers, flush all channels of the valve with water to prevent precipitation of the buffer, otherwise salt crystals could drop into an unused channel and form plugs that may cause leaks of that channel. Such leaks will interfere with the general performance of the valve. When using buffers in combination with organic solvents in the Agilent 1260 Infinity Quaternary Pump it is recommended to connect the aequous solutions/buffers to one of the bottom ports and the organic solvent to one of the upper gradient valve ports. It is best to have the organic channel directly above the buffer channel (e.g., A - buffer, B - organic solvent).

1 Disconnect the connecting tube, waste tube and the solvent tubes from the MCGV, unclip them from the tube clips and place them into the solvent cabinet to avoid flow by hydrostatic pressure.

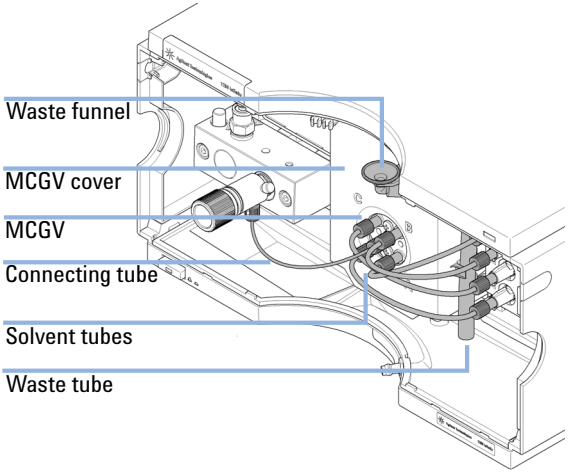

2 Press the lower sides of the cover to unclip it. Remove the cover.

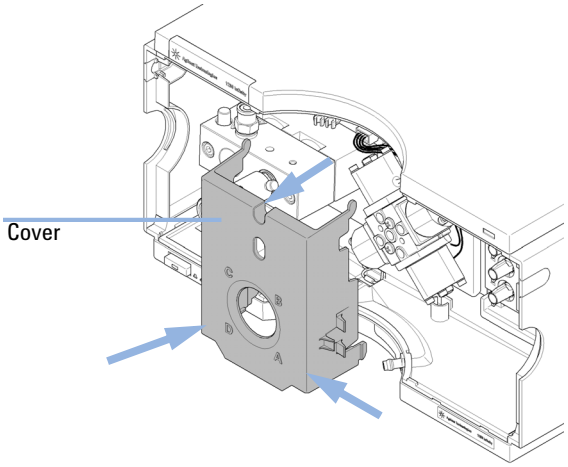

3 Disconnect the MCGV cable, unscrew the two screws and remove the valve.

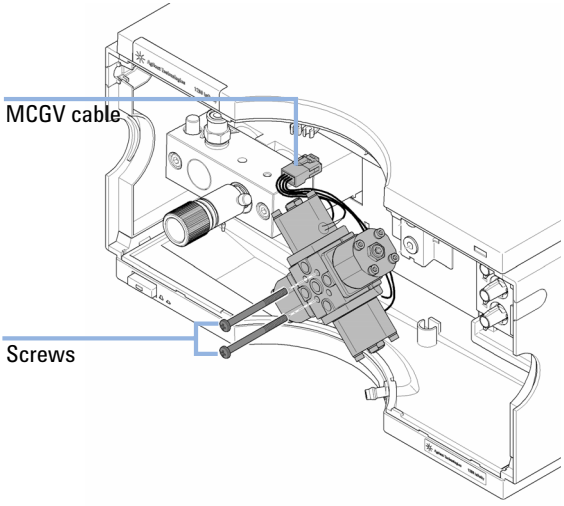

4 Place the new MCGV into position. Make sure that channel A of the MCGV is put at the bottom-right position. Tighten the two screws and connect the cable to its connector.

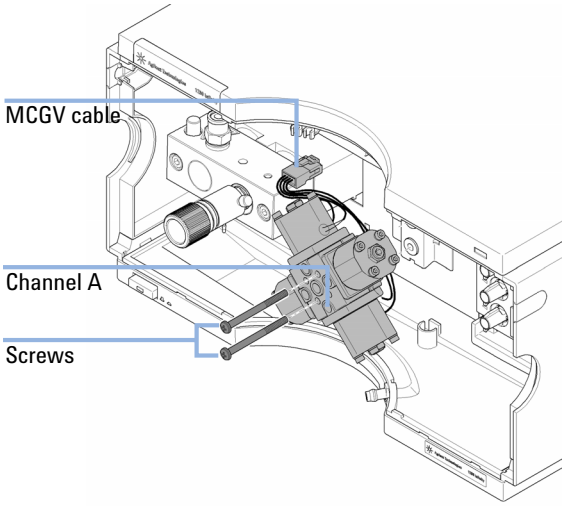

5 Install the MCGV cover. Reconnect the waste funnel with the waste tube holder in the top cover. Insert waste tube in the holder in the leak pan and clip tube to the MCGV cover.

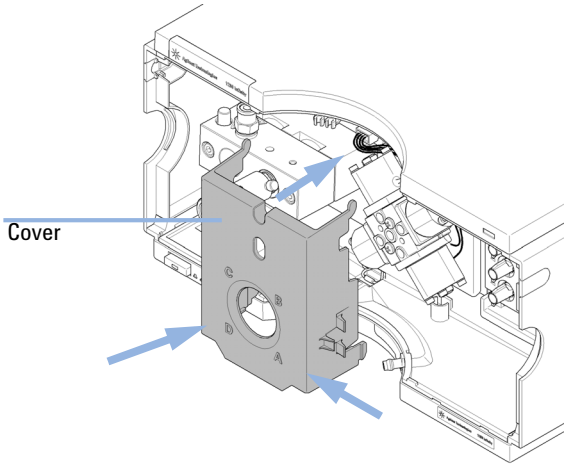

6 Reconnect the tube from the inlet valve to the middle position of the MCGV. Connect solvent tubes for channels A-D from the MCGV to the degasser outlets.

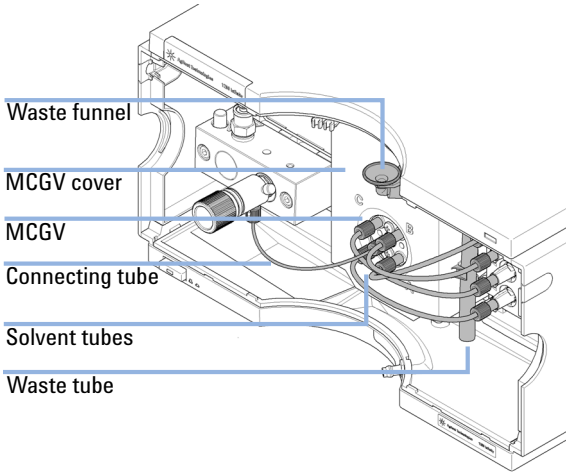

Exchanging the Optional Interface Board

When Board defective

Parts required

#	p/n	Description
1	G1351-68701	Interface board (BCD) with external contacts and BCD outputs

CAUTION Electronic boards are static sensitive and should be handled with care so as not to damage them. Touching electronic boards and components can cause electrostatic discharge (ESD).

ESD can damage electronic boards and components.

→ Be sure to hold the board by the edges and do not touch the electrical components. Always use an ESD protection (for example, an ESD wrist strap) when handling electronic boards and components.

1. Switch off the pump at the main power switch, unplug the pump from line power.
2. Disconnect cables from the interfaceboard connectors.
3. Loosen the screws. Slide out the interface board from the pump.
4. Install the new interface board. Secure screws.
5. Reconnect the cables to the board connector.

6 Reconnect the pump to line power.

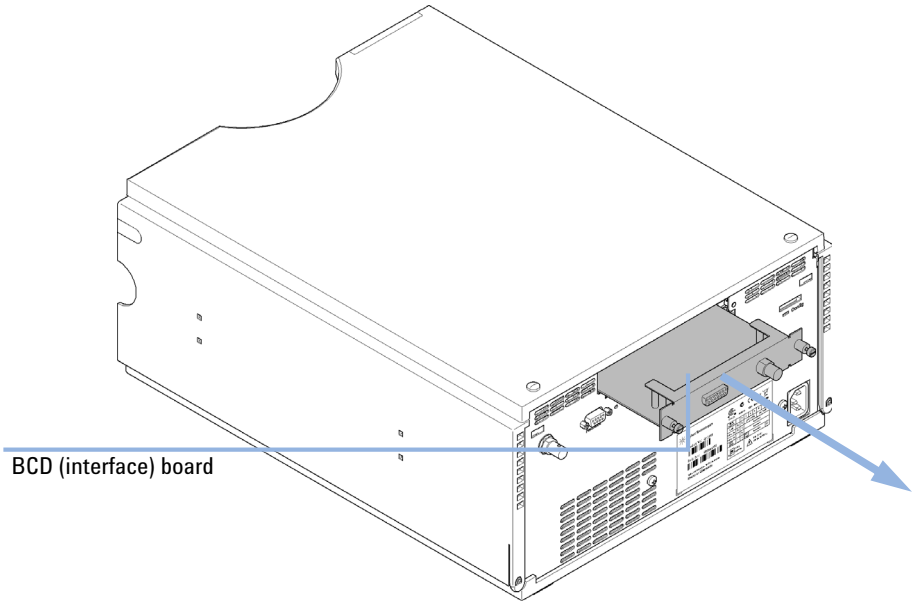

Figure 17 Exchanging the Interface Board

Exchanging the Active Inlet Valve (AIV) or its Cartridge

When

If internally leaking (backflow)

Tools required

- Wrench 14 mm
- Pair of Tweezers

Parts required

#	p/n	Description
1	G1312-60025	Active inlet valve body (optional), without cartridge
1	G1312-60020	Cartridge for active inlet valve 600bar
1	G1311-67304	Connecting tube, MCGV to AIV

Preparations

- Switch off pump at the main power switch and unplug the power cable
- Use a solvent shutoff valve or lift up solvent filters for avoiding leakages

NOTE

The active inlet valve can be installed for highest method backward compatibility or special applications. This is a configuration change which is not covered by the specifications for this module.

NOTE

By default, 1260 Infinity pumps do not have an active inlet valve. The first time an AIV shall be installed, a connector and cable to the main board must be installed by the service and a different connection tube is needed.

1. Remove the front cover.
2. Unplug the active inlet valve cable from the connector.
3. Disconnect the solvent inlet tube from the inlet valve (be aware that solvent may leak out of the tube due to hydrostatic flow).
4. Unscrew the adapter from the active inlet valve.

5 Using a 14 mm wrench loosen the active inlet valve and remove the valve from the pump head.

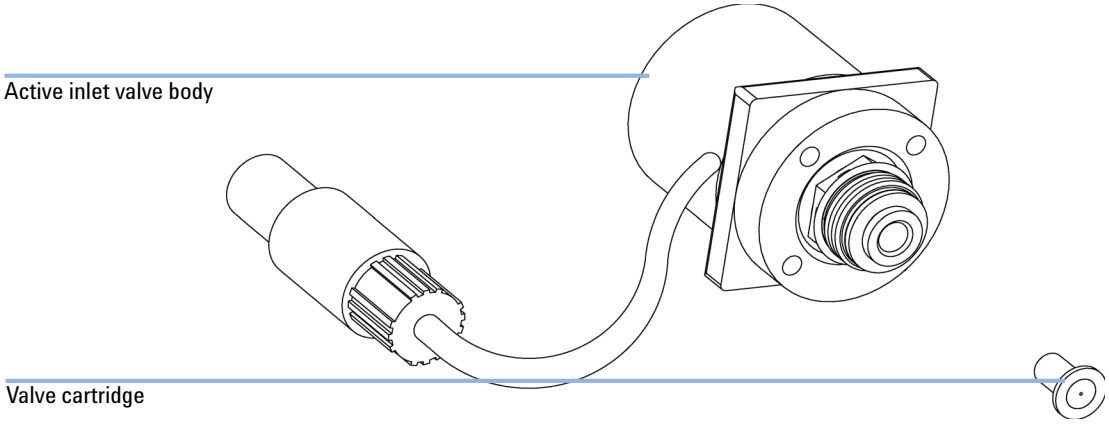

Figure 18 Active Inlet Valve Assembly

6 Using a pair of tweezers remove the valve cartridge from the actuator assembly.

7 Before inserting the new valve cartridge clean the area in the actuator assembly. Flush the cartridge area thoroughly with alcohol.

8 Insert a new cartridge into the actuator assembly (make sure the valve cartridge is completely inserted into the actuator assembly).

9 Insert the new valve into the pump head. Using the 14 mm wrench turn the nut until it is hand tight.

10 Position the valve so that the solvent inlet tube connection points towards the front.

11 Using the 14 mm wrench tighten the nut by turning the valve in its final position (not more than a quarter turn).

12 Reconnect the adapter at the active inlet valve.

13 Reconnect the solvent inlet tube to the adapter. Reconnect the active inlet valve cable to the connector in the Z-panel.

14 Reinstall the front cover.

15 Purge the system with 30 mL of solvent in order to achieve a low pressure ripple, see “Regular Priming” on page 61.

Replacing the Module's Firmware

When

The installation of newer firmware might be necessary
- if a newer version solves problems of older versions or
- to keep all systems on the same (validated) revision.

The installation of older firmware might be necessary
- to keep all systems on the same (validated) revision or
- if a new module with newer firmware is added to a system or
- if third part control software requires a special version.

Tools required

- LAN/RS-232 Firmware Update Tool or
- Agilent Diagnostic Software
- Instant Pilot G4208A (only if supported by module)

Parts required

#	Description
1	Firmware, tools and documentation from Agilent web site

Preparations

Read update documentation provided with the Firmware Update Tool.

To upgrade/downgrade the module's firmware carry out the following steps:

1 Download the required module firmware, the latest LAN/RS-232 FW Update Tool and the documentation from the Agilent web.
   - http://www.chem.agilent.com/scripts/cag_firmware.asp.

2 To load the firmware into the module follow the instructions in the documentation.

Module Specific Information

There is no specific information for this module.

10
Parts for Maintenance

This chapter provides information on parts for maintenance.

Pump Head Assembly Without Seal Wash

Item	p/n	Description
	G1312-60064	Pump Head without Seal Wash
1	5067-4695	Sapphire piston (default)
2	G1312-60062	Piston housing (incl. spring)
3	G4220-63015	Support Ring without Seal Wash
4	0905-1503	Piston seal PTFE, carbon filled, black (pack of 2), default
		or
4	0905-1719	Pump Seal PE, yellow (pack of 2)
5	G1312-25260	Pump housing
6	G1312-60066	Passive inlet valve
		or
	G1312-60025	Active inlet valve body (optional), without cartridge
	G1312-60020	Cartridge for active inlet valve 600bar
7	G1312-60067	Outlet valve, complete
8	5042-1303	Screw lock
9	G1312-60061	Purge valve assembly
10	0515-2118	Screw M5, 60 mm long
	G4220-24013	Backup Ring for Support Ring

Complete pump head assembly contains items 1-5 and item 8.

For pistons and piston seals, see “Choosing the Right Pump Seals” on page 76.

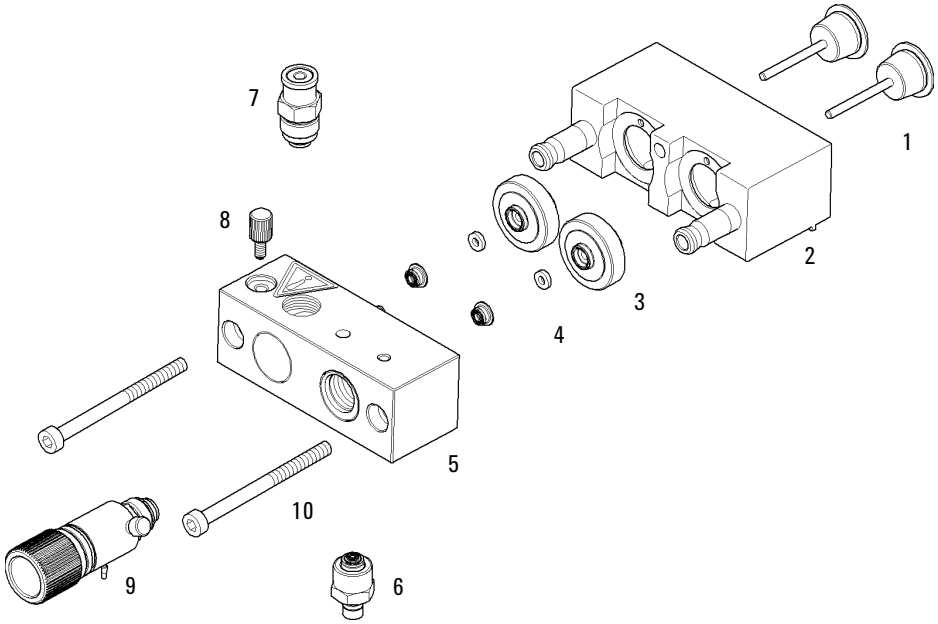

Figure 19 Pump Head Assembly without seal wash option

Pump Head Assembly with Seal Wash Option (600 bar)

Item	p/n	Description
	G1312-60065	Pump Head with Seal Wash
1	5067-4695	Sapphire piston (default)
2	G1312-60062	Piston housing (incl. spring)
3	G4220-63010	Support Ring (Seal Wash)
4	0905-1175	Wash seal PTFE, carbon filled
		or
4	0905-1718	Wash Seal PE
	0890-1764	Tubing, wash option
5	01018-07102	Gasket (Seal wash)
6	G4220-26210	Seal Holder
	G4220-24013	Backup Ring for Support Ring
7	0905-1503	Piston seal PTFE, carbon filled, black (pack of 2), default
		or
7	0905-1719	Pump Seal PE, yellow (pack of 2)
8	G1312-25260	Pump housing
9	G1312-60066	Passive inlet valve
		or
9	G1312-60025	Active inlet valve body (optional), without cartridge
	G1312-60020	Cartridge for active inlet valve 600bar
10	G1312-60067	Outlet valve, complete
11	5042-1303	Screw lock
12	G1312-60061	Purge valve assembly

Item	p/n	Description
13	0515-2118	Screw M5, 60 mm long
14	G1311-60161	Seal wash pump assembly

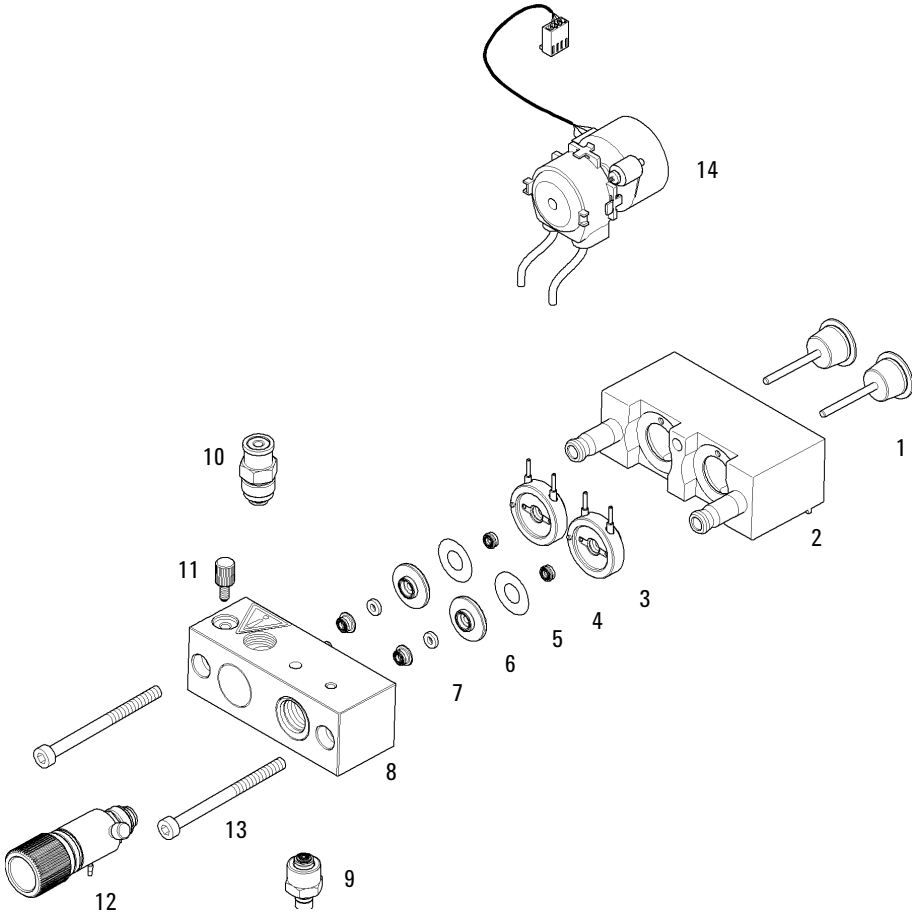

Figure 20 Pump Head with Seal Wash Option

Outlet Valve

p/n	Description
G1312-60067	Outlet valve, complete

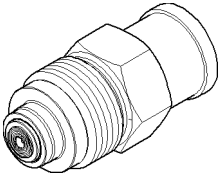

Figure 21 Outlet Valve

Purge Valve Assembly

Item	p/n	Description
1	G1312-60061	Purge valve assembly
2	01018-22707	PTFE frit (pack of 5)
3	5067-4728	Seal cap

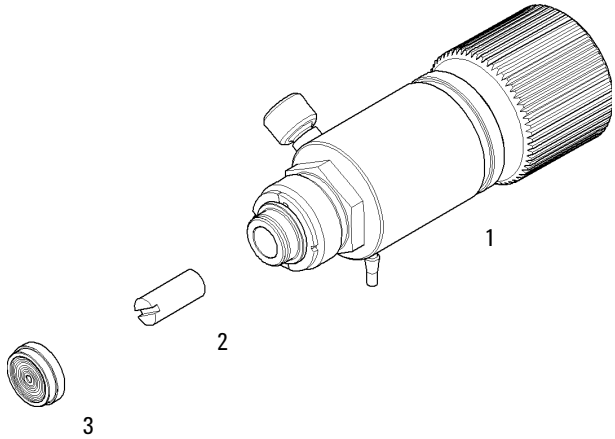

Active Inlet Valve Assembly

Item	p/n	Description
1	G1312-60025	Active inlet valve without cartridge
2	G1312-60020	Cartridge for active inlet valve 600bar

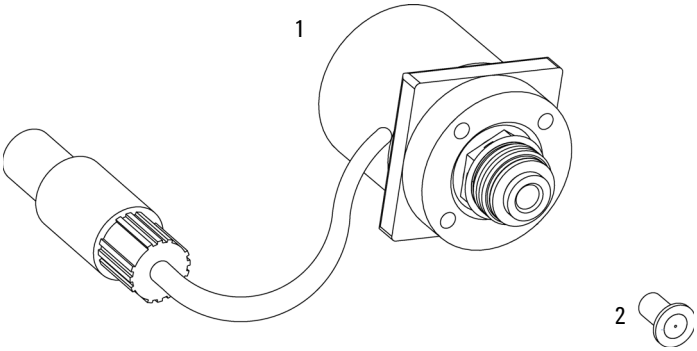

Figure 22 Active Inlet Valve Assembly

Accessory Kit G1311-68755

Accessory Kit G1311-68755

p/n	Description
5062-2461	Waste tube, 5 m (reorder pack)
5063-6527	Tubing assembly, i.d. 6 mm, o.d. 9 mm, 1.2 m (to waste)
5181-1519	CAN cable, Agilent module to module, 1 m
5988-8453EN	Capillary/fitting starter kit brochure
9222-0519	Bag, plastic
G1329-87300	Capillary 0.17 mm, 900 mm
G1311-90107	Algae note
5042-9954	Tubing clip (2x), re-order 4/pk
G1311-60003	Bottle-head assembly

Seal Wash Option Kit

p/n	Description
G1311-60161	Seal wash pump assembly
5042-8507	Seal wash pump cartridge (silicone tubing)
5062-2465	Support ring, seal wash
0905-1175	Secondary seal (pre-installed in support rings)
5062-2484	Gasket, seal wash (pack of 6)
5001-3743	Seal holder
0890-1764	Silicone rubber tubing 1 mm i.d. (3 m)
5063-6589	Standard seals (pack of 2)
01018-2370	Seals insert tool

Solvent Cabinet

Item	p/n	Description
1	5065-9981	Solvent cabinet, including all plastic parts
2	5043-0207	Name plate 1260
4	5042-8567	Leak pan
5	9301-1420	Solvent bottle, transparent
6	9301-1450	Solvent bottle, amber
7	G1311-60003	Bottle-head assembly

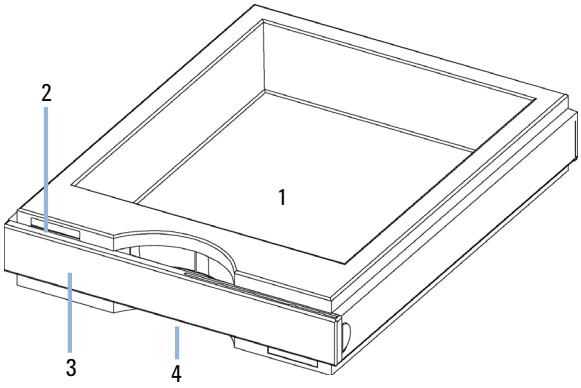

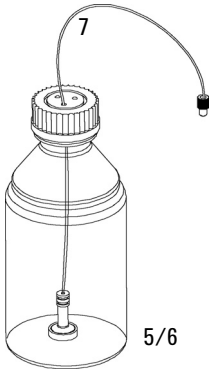

Figure 23 Solvent Cabinet Parts

Bottle Head Assembly

Item	p/n	Description
	G1311-60003	Bottle-head assembly
1	5063-6598	Ferrules with lock ring (10x)
2	5063-6599	Tube screw (10x)
3		Wire marker
4	5062-2483	Solvent tubing, 5 m
5	5062-8517	Inlet filter adapter (pack of 4)
6	5041-2168	Solvent inlet filter, 20 µm

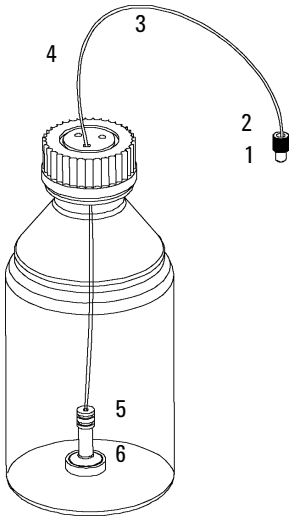

Figure 24 Bottle-Head Assembly Parts

Hydraulic Path

Item	p/n	Description
1	G1311-67301	Capillary, piston 1 to damper
	G1311-60003	Bottle-head assembly
2	G1311-67300	Capillary, damper to piston 2
3	G1312-67305	Outlet capillary, pump to injector device
	G1329-87300	Outlet capillary, pump to thermostattable autosampler
4	5062-2461	Waste tube, 5 m (reorder pack)
	0100-1847	Adapter AIV to solvent inlet tubes

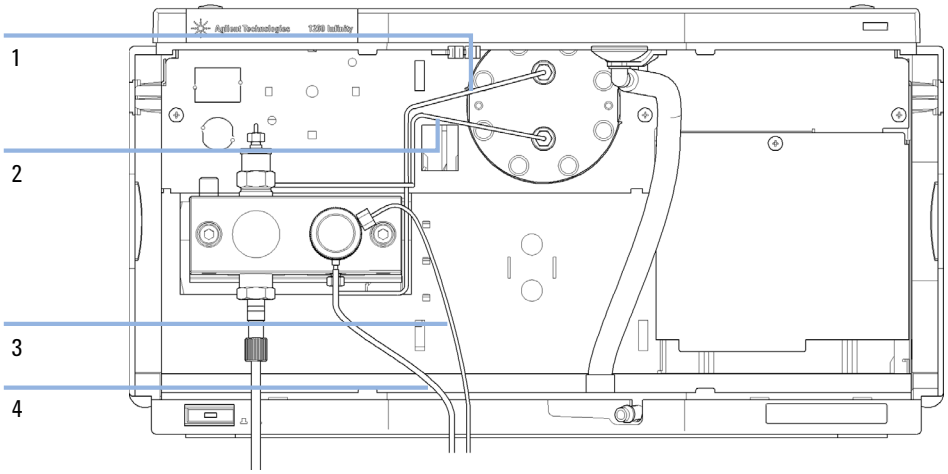

Figure 25 Hydraulic Flow Path of the Isocratic Pump

Hydraulic Path

Item	p/n	Description
1	G1312-67305	Outlet capillary, pump to injector device
		or
1	G1329-87300	Outlet capillary, pump to thermostattable autosampler
	G1311-60003	Bottle-head assembly
2	G1322-67300	Kit of 4 solvent tubes for connection degasser to MCGV (Quaternary Pump) including labels
3	G1311-81600	Capillary, piston 1 to damper
4	G1311-81601	Capillary, damper to piston 2
5	5067-4693	Connecting tube, MCGV to PIV
		or
5	G1311-67304	Connecting tube, MCGV to AIV
6	5062-2461	Waste tube, 5 m (reorder pack)

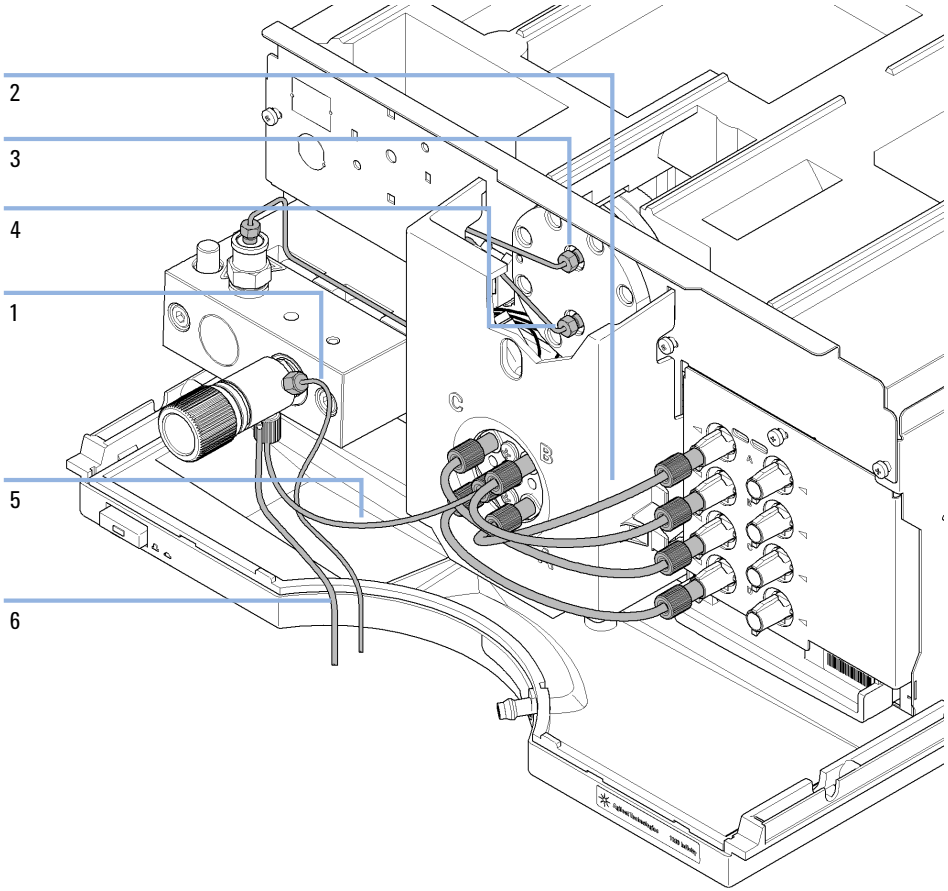

Figure 26 Hydraulic Flow Path of the Quaternary Pump

11
Identifying Cables

This chapter provides information on cables used with the Agilent 1200 Infinity Series modules.

Cable Overview

NOTE Never use cables other than the ones supplied by Agilent Technologies to ensure proper functionality and compliance with safety or EMC regulations.

Analog cables

p/n	Description
35900-60750	Agilent module to 3394/6 integrators
35900-60750	Agilent 35900A A/D converter
01046-60105	Analog cable (BNC to general purpose, spade lugs)

Remote cables

p/n	Description
03394-60600	Agilent module to 3396A Series I integrators
	3396 Series II / 3395A integrator, see details in section "Remote Cables" on page 170
03396-61010	Agilent module to 3396 Series III / 3395B integrators
5061-3378	Agilent module to Agilent 35900 A/D converters (or HP 1050/1046A/1049A)
01046-60201	Agilent module to general purpose

BCD cables

p/n	Description
03396-60560	Agilent module to 3396 integrators
G1351-81600	Agilent module to general purpose

CAN cables

p/n	Description
5181-1516	CAN cable, Agilent module to module, 0.5 m
5181-1519	CAN cable, Agilent module to module, 1 m

LAN cables

p/n	Description
5023-0203	Cross-over network cable, shielded, 3 m (for point to point connection)
5023-0202	Twisted pair network cable, shielded, 7 m (for point to point connection)

External Contact Cable

p/n	Description
G1103-61611	External contact cable - Agilent module interface board to general purposes

RS-232 cables

p/n	Description
G1530-60600	RS-232 cable, 2 m
RS232-61600	RS-232 cable, 2.5 m Instrument to PC, 9-to-9 pin (female). This cable has special pin-out, and is not compatible with connecting printers and plotters. It's also called "Null Modem Cable" with full handshaking where the wiring is made between pins 1-1, 2-3, 3-2, 4-6, 5-5, 6-4, 7-8, 8-7, 9-9.
5181-1561	RS-232 cable, 8 m

Analog Cables

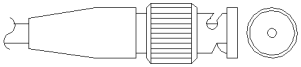

One end of these cables provides a BNC connector to be connected to Agilent modules. The other end depends on the instrument to which connection is being made.

Agilent Module to 3394/6 Integrators

p/n 35900-60750	Pin 3394/6	Pin Agilent module	Signal Name
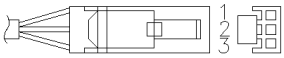	1		Not connected
	2	Shield	Analog -
	3	Center	Analog +

Agilent Module to BNC Connector

p/n 8120-1840	Pin BNC	Pin Agilent module	Signal Name
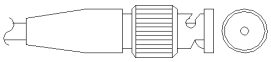	Shield	Shield	Analog -
	Center	Center	Analog +

Agilent Module to General Purpose

p/n 01046-60105	Pin 3394/6	Pin Agilent module	Signal Name
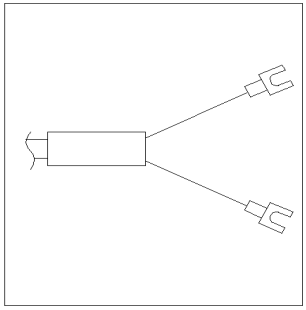	1		Not connected
	2	Black	Analog -
	3	Red	Analog +

Remote Cables

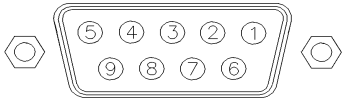

One end of these cables provides a Agilent Technologies APG (Analytical Products Group) remote connector to be connected to Agilent modules. The other end depends on the instrument to be connected to.

Agilent Module to 3396A Integrators

p/n 03394-60600	Pin 3394	Pin Agilent module	Signal Name	Active (TTL)
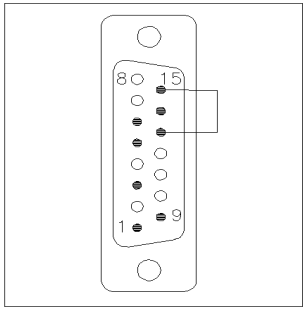	9	1 - White	Digital ground	
	NC	2 - Brown	Prepare run	Low
	3	3 - Gray	Start	Low
	NC	4 - Blue	Shut down	Low
	NC	5 - Pink	Not connected	
	NC	6 - Yellow	Power on	High
	5,14	7 - Red	Ready	High
	1	8 - Green	Stop	Low
	NC	9 - Black	Start request	Low
	13, 15		Not connected	

Agilent Module to 3396 Series II / 3395A Integrators

Use the cable Agilent module to 3396A Series I integrators (p/n 03394-60600) and cut pin #5 on the integrator side. Otherwise the integrator prints START; not ready.

Agilent Module to 3396 Series III / 3395B Integrators

p/n 03396-61010	Pin 33XX	Pin Agilent module	Signal Name	Active (TTL)
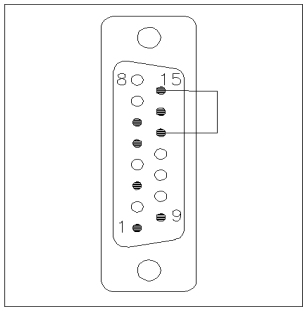	9	1 - White	Digital ground	
	NC	2 - Brown	Prepare run	Low
	3	3 - Gray	Start	Low
	NC	4 - Blue	Shut down	Low
	NC	5 - Pink	Not connected	
	NC	6 - Yellow	Power on	High
	14	7 - Red	Ready	High
	4	8 - Green	Stop	Low
	NC	9 - Black	Start request	Low
	13, 15		Not connected	

Agilent Module to Agilent 35900 A/D Converters

p/n 5061-3378	Pin 35900 A/D	Pin Agilent module	Signal Name	Active (TTL)
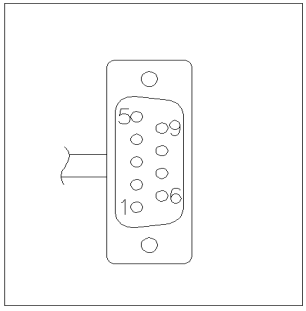	1 - White	1 - White	Digital ground	
	2 - Brown	2 - Brown	Prepare run	Low
	3 - Gray	3 - Gray	Start	Low
	4 - Blue	4 - Blue	Shut down	Low
	5 - Pink	5 - Pink	Not connected	
	6 - Yellow	6 - Yellow	Power on	High
	7 - Red	7 - Red	Ready	High
	8 - Green	8 - Green	Stop	Low
	9 - Black	9 - Black	Start request	Low

Agilent Module to General Purpose

p/n 01046-60201	Pin Universal	Pin Agilent module	Signal Name	Active (TTL)
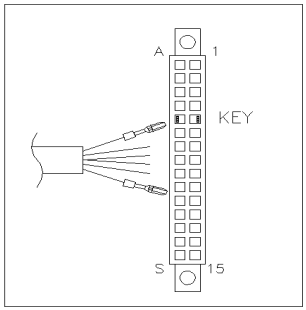		1 - White	Digital ground	
		2 - Brown	Prepare run	Low
		3 - Gray	Start	Low
		4 - Blue	Shut down	Low
		5 - Pink	Not connected	
		6 - Yellow	Power on	High
		7 - Red	Ready	High
		8 - Green	Stop	Low
		9 - Black	Start request	Low

BCD Cables

One end of these cables provides a 15-pin BCD connector to be connected to the Agilent modules. The other end depends on the instrument to be connected to

Agilent Module to General Purpose

p/n G1351-81600	Wire Color	Pin Agilent module	Signal Name	BCD Digit
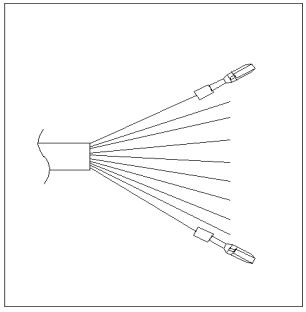	Green	1	BCD 5	20
	Violet	2	BCD 7	80
	Blue	3	BCD 6	40
	Yellow	4	BCD 4	10
	Black	5	BCD 0	1
	Orange	6	BCD 3	8
	Red	7	BCD 2	4
	Brown	8	BCD 1	2
	Gray	9	Digital ground	Gray
	Gray/pink	10	BCD 11	800
	Red/blue	11	BCD 10	400
	White/green	12	BCD 9	200
	Brown/green	13	BCD 8	100
	not connected	14		
	not connected	15	+ 5 V	Low

Agilent Module to 3396 Integrators

p/n 03396-60560	Pin 3396	Pin Agilent module	Signal Name	BCD Digit
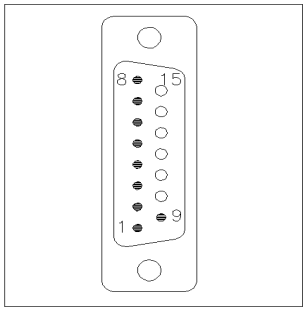	1	1	BCD 5	20
	2	2	BCD 7	80
	3	3	BCD 6	40
	4	4	BCD 4	10
	5	5	BCD0	1
	6	6	BCD 3	8
	7	7	BCD 2	4
	8	8	BCD 1	2
	9	9	Digital ground	
	NC	15	+ 5 V	Low

CAN/LAN Cables

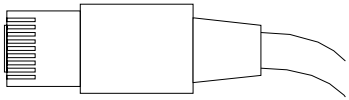

Both ends of this cable provide a modular plug to be connected to Agilent modules CAN or LAN connectors.

CAN Cables

p/n	Description
5181-1516	CAN cable, Agilent module to module, 0.5 m
5181-1519	CAN cable, Agilent module to module, 1 m

LAN Cables

p/n	Description
5023-0203	Cross-over network cable, shielded, 3 m (for point to point connection)
5023-0202	Twisted pair network cable, shielded, 7 m (for point to point connection)

External Contact Cable

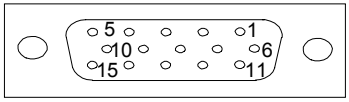

One end of this cable provides a 15-pin plug to be connected to Agilent modules interface board. The other end is for general purpose.

Agilent Module Interface Board to general purposes

p/n G1103-61611	Color	Pin Agilent module	Signal Name
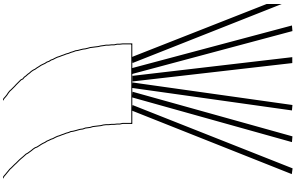	White	1	EXT 1
	Brown	2	EXT 1
	Green	3	EXT 2
	Yellow	4	EXT 2
	Grey	5	EXT 3
	Pink	6	EXT 3
	Blue	7	EXT 4
	Red	8	EXT 4
	Black	9	Not connected
	Violet	10	Not connected
	Grey/pink	11	Not connected
	Red/blue	12	Not connected
	White/green	13	Not connected
	Brown/green	14	Not connected
	White/yellow	15	Not connected

Agilent Module to PC

p/n	Description
G1530-60600	RS-232 cable, 2 m
RS232-61600	RS-232 cable, 2.5 m Instrument to PC, 9-to-9 pin (female). This cable has special pin-out, and is not compatible with connecting printers and plotters. It's also called "Null Modem Cable" with full handshaking where the wiring is made between pins 1-1, 2-3, 3-2, 4-6, 5-5, 6-4, 7-8, 8-7, 9-9.
5181-1561	RS-232 cable, 8 m

Agilent 1200 Module to Printer

p/n	Description
5181-1529	Cable Printer Serial & Parallel, is a SUB-D 9 pin female vs. Centronics connector on the other end (NOT FOR FW UPDATE). For use with G1323 Control Module.

12
Appendix

This chapter provides addition information on safety, legal and web.

General Safety Information

The following general safety precautions must be observed during all phases of operation, service, and repair of this instrument. Failure to comply with these precautions or with specific warnings elsewhere in this manual violates safety standards of design, manufacture, and intended use of the instrument. Agilent Technologies assumes no liability for the customer's failure to comply with these requirements.

WARNING

Ensure the proper usage of the equipment.

The protection provided by the equipment may be impaired.

→ The operator of this instrument is advised to use the equipment in a manner as specified in this manual.

Safety Standards

This is a Safety Class I instrument (provided with terminal for protective earthing) and has been manufactured and tested according to international safety standards.

Operation

Before applying power, comply with the installation section. Additionally the following must be observed.

Do not remove instrument covers when operating. Before the instrument is switched on, all protective earth terminals, extension cords, auto-transformers, and devices connected to it must be connected to a protective earth via a ground socket. Any interruption of the protective earth grounding will cause a potential shock hazard that could result in serious personal injury. Whenever it is likely that the protection has been impaired, the instrument must be made inoperative and be secured against any intended operation.

Make sure that only fuses with the required rated current and of the specified type (normal blow, time delay, and so on) are used for replacement. The use of repaired fuses and the short-circuiting of fuse holders must be avoided.

Some adjustments described in the manual, are made with power supplied to the instrument, and protective covers removed. Energy available at many points may, if contacted, result in personal injury.

Any adjustment, maintenance, and repair of the opened instrument under voltage should be avoided whenever possible. When inevitable, this has to be carried out by a skilled person who is aware of the hazard involved. Do not attempt internal service or adjustment unless another person, capable of rendering first aid and resuscitation, is present. Do not replace components with power cable connected.

Do not operate the instrument in the presence of flammable gases or fumes. Operation of any electrical instrument in such an environment constitutes a definite safety hazard.

Do not install substitute parts or make any unauthorized modification to the instrument.

Capacitors inside the instrument may still be charged, even though the instrument has been disconnected from its source of supply. Dangerous voltages, capable of causing serious personal injury, are present in this instrument. Use extreme caution when handling, testing and adjusting.

When working with solvents please observe appropriate safety procedures (e.g. goggles, safety gloves and protective clothing) as described in the material handling and safety data sheet by the solvent vendor, especially when toxic or hazardous solvents are used.

Safety Symbols

Table 23 Safety Symbols

Symbol	Description
	The apparatus is marked with this symbol when the user should refer to the instruction manual in order to protect risk of harm to the operator and to protect the apparatus against damage.
	Indicates dangerous voltages.
	Indicates a protected ground terminal.
	Indicates eye damage may result from directly viewing the light produced by the deuterium lamp used in this product.
	The apparatus is marked with this symbol when hot surfaces are available and the user should not touch it when heated up.

WARNING

A WARNING

alerts you to situations that could cause physical injury or death.

→ Do not proceed beyond a warning until you have fully understood and met the indicated conditions.

CAUTION

A CAUTION

alerts you to situations that could cause loss of data, or damage of equipment.

→ Do not proceed beyond a caution until you have fully understood and met the indicated conditions.

The Waste Electrical and Electronic Equipment Directive

Abstract

The Waste Electrical and Electronic Equipment (WEEE) Directive (2002/96/EC), adopted by EU Commission on 13 February 2003, is introducing producer responsibility on all electric and electronic appliances starting with 13 August 2005.

NOTE

This product complies with the WEEE Directive (2002/96/EC) marking requirements. The affixed label indicates that you must not discard this electrical/electronic product in domestic household waste.

Product Category:

With reference to the equipment types in the WEEE Directive Annex I, this product is classed as a Monitoring and Control Instrumentation product.

NOTE

Do not dispose off in domestic household waste

To return unwanted products, contact your local Agilent office, or see www.agilent.com for more information.

Batteries Information

WARNING

Lithium batteries may not be disposed-off into the domestic waste. Transportation of discharged Lithium batteries through carriers regulated by IATA/ICAO, ADR, RID, IMDG is not allowed.

Danger of explosion if battery is incorrectly replaced.

→ Discharged Lithium batteries shall be disposed off locally according to national waste disposal regulations for batteries.

→ Replace only with the same or equivalent type recommended by the equipment manufacturer.

WARNING

Lithiumbatteri - Eksplosionsfare ved fejlagtig håndtering.

Udskiftning må kun ske med batteri af samme fabrikat og type.

→ Lever det brugte batteri tilbage til leverandøren.

WARNING

Lithiumbatteri - Eksplosionsfare.

Ved udskiftning benyttes kun batteri som anbefalt av apparatfabrikanten.

→ Brukt batteri returneres appararleverandoren.

NOTE

Bij dit apparaat zijn batterijen geleverd. Wanneer deze leeg zijn, moet u ze niet weggooien maar inleveren als KCA.

Radio Interference

Cables supplied by Agilent Technologies are screened to provide optimized protection against radio interference. All cables are in compliance with safety or EMC regulations.

Test and Measurement

If test and measurement equipment is operated with unscreened cables, or used for measurements on open set-ups, the user has to assure that under operating conditions the radio interference limits are still met within the premises.

Sound Emission

Manufacturer's Declaration

This statement is provided to comply with the requirements of the German Sound Emission Directive of 18 January 1991.

This product has a sound pressure emission (at the operator position) < 70 dB.

- Sound Pressure Lp < 70 dB (A)
- At Operator Position
- Normal Operation
- According to ISO 7779:1988/EN 27779/1991 (Type Test)

Solvent Information

Observe the following recommendations on the use of solvents.

- Brown glass ware can avoid growth of algae.
- Small particles can permanently block capillaries and valves. Therefore always filter solvents through 0.4 µm filters.
- Avoid the use of the following steel-corrosive solvents:
  - Solutions of alkali halides and their respective acids (for example, lithium iodide, potassium chloride, and so on),
  - High concentrations of inorganic acids like sulfuric acid and nitric acid, especially at higher temperatures (if your chromatography method allows, replace by phosphoric acid or phosphate buffer which are less corrosive against stainless steel),
  - Halogenated solvents or mixtures which form radicals and/or acids, for example:

    $2CHCl_3 + O_2 \rightarrow 2COCl_2 + 2HCl$

    This reaction, in which stainless steel probably acts as a catalyst, occurs quickly with dried chloroform if the drying process removes the stabilizing alcohol,
  - Chromatographic grade ethers, which can contain peroxides (for example, THF, dioxane, di-isopropylether) such ethers should be filtered through dry aluminium oxide which adsorbs the peroxides,
  - Solvents containing strong complexing agents (e.g. EDTA),
  - Mixtures of carbon tetrachloride with 2-propanol or THF.

Agilent Technologies on Internet

For the latest information on products and services visit our worldwide web site on the Internet at:

http://www.agilent.com

Select Products/Chemical Analysis

It will provide also the latest firmware of the modules for download.

Index

T

U

V

W

www.agilent.com

In This Book

This manual contains technical information about the Agilent 1260 Infinity Isocratic Pump (G1310B) and Quaternary Pump (G1311B). The manual describes the following:

- introduction,
- site requirements and specifications,
- installing the pump,
- using the pump,
- optimizing performance,
- troubleshooting and diagnostics,
- maintenance,
- parts and materials for maintenance,
- identifiying cables,
- appendix.

Printed in Germany
06/10

G1310-90012

Agilent Technologies