Agilent 1290 Infinity Binary Pump VL

User Manual

Agilent Technologies

Notices

Manual Part Number

G4220-90001

Edition

06/2010

Printed in Germany

Agilent Technologies
Hewlett-Packard-Strasse 8
76337 Waldbronn

This product may be used as a component of an in vitro diagnostic system if the system is registered with the appropriate authorities and complies with the relevant regulations. Otherwise, it is intended only for general laboratory use.

Warranty

The material contained in this document is provided "as is," and is subject to being changed, without notice, in future editions. Further, to the maximum extent permitted by applicable law, Agilent disclaims all warranties, either express or implied, with regard to this manual and any information contained herein, including but not limited to the implied warranties of merchantability and fitness for a particular purpose. Agilent shall not be liable for errors or for incidental or consequential damages in connection with the furnishing, use, or performance of this document or of any information contained herein. Should Agilent and the user have a separate written agreement with warranty terms covering the material in this document that conflict with these terms, the warranty terms in the separate agreement shall control.

Technology Licenses

The hardware and/or software described in this document are furnished under a license and may be used or copied only in accordance with the terms of such license.

Restricted Rights Legend

If software is for use in the performance of a U.S. Government prime contract or subcontract, Software is delivered and licensed as "Commercial computer software" as defined in DFAR 252.227-7014 (June 1995), or as a "commercial item" as defined in FAR 2.101(a) or as "Restricted computer software" as defined in FAR 52.227-19 (June 1987) or any equivalent agency regulation or contract clause. Use, duplication or disclosure of Software is subject to Agilent Technologies' standard commercial license terms, and non-DOD Departments and Agencies of the U.S. Government will receive no greater than Restricted Rights as defined in FAR 52.227-19(c)(1-2) (June 1987). U.S. Government users will receive no greater than Limited Rights as defined in FAR 52.227-14 (June 1987) or DFAR 252.227-7015 (b)(2) (November 1995), as applicable in any technical data.

Safety Notices

CAUTION

A **CAUTION** notice denotes a hazard. It calls attention to an operating procedure, practice, or the like that, if not correctly performed or adhered to, could result in damage to the product or loss of important data. Do not proceed beyond a **CAUTION** notice until the indicated conditions are fully understood and met.

WARNING

A WARNING notice denotes a hazard. It calls attention to an operating procedure, practice, or the like that, if not correctly performed or adhered to, could result in personal injury or death. Do not proceed beyond a WARNING notice until the indicated conditions are fully understood and met.

In This Guide...

This manual covers the Agilent 1290 Infinity Binary Pump (G4220).

1 Introduction

This chapter gives an introduction to the pump, instrument overview and internal connectors.

2 Site Requirements and Specifications

This chapter provides information on environmental requirements, physical and performance specifications.

3 Installing the Module

This chapter gives information about the preferred stack setup for your system and the installation of your Agilent 1290 Infinity Binary Pump.

4 LAN Configuration

This chapter provides information on connecting the module to the Agilent ChemStation PC.

5 Using the Pump

This chapter explains the operational parameters of the Binary Pump SL.

6 How to Optimize the Performance of Your Module

This chapter gives hints on how to optimize the performance or use additional devices.

7 Troubleshooting and Diagnostics

Overview about the troubleshooting and diagnostic features.

8 Error Information

This chapter describes the meaning of error messages, and provides information on probable causes and suggested actions how to recover from error conditions.

9 Test Functions and Calibrations

This chapter describes the tests for the module.

10 Maintenance

This chapter describes the maintenance of the Agilent 1290 Infinity Binary Pump.

11 Parts and Materials for Maintenance

This chapter provides information on parts for maintenance.

12 Identifying Cables

This chapter summarizes information on all cables.

13 Appendix

This chapter provides addition information on safety, legal and web.

Contents

1 Introduction

This chapter gives an introduction to the pump, instrument overview and internal connectors.

Features

The Binary pump is designed for highest performance, GLP compliance and easy maintenance. It includes the following features:

- Seal wash for continued high lifetime of pump seals using high buffer concentrations.
- Solvent selection valve for method flexibility.
- Jet Weaver for optimum mixing performance with a minimum of delay volume.
- Automatic purge function for ease of use and unattended preparation of the system.
- Auto tuning of the delivery cycle for compensation of elasticity and dead volume effects.
- Solvent selection for optimum density correction.
- Fast defill function to increase robustness of the pump.
- Two pistons in series design for increased reliability.
- Smooth motion control to prevent shock movements.

For specifications, see Table 13 on page 34.

NOTE This Binary pump has been introduced together with the Agilent 1290 Infinity Liquid Chromatograph.

Overview of the Binary Pump

The Agilent 1290 Infinity Binary Pump comprises two identical pumps integrated into one housing. Binary gradients are created by high-pressure mixing. A degassing unit is included for applications that require best flow stability, especially at low flow rates, for maximum detector sensitivity. The flow path of the pump has been optimized for minimal delay of gradients. Typical applications are high throughput methods with fast gradients on high resolution 2.1 mm columns. The pump is capable of delivering flow in the range of 0.05 -5 mL/min against up to 1050 bar. A solvent selection valve allows forming binary mixtures (isocratic or gradient) from one of two solvents per channel. Active seal wash (optional) is available for use with concentrated buffer solutions.

Pump Principle

The Binary Pump is based on a two-channel, dual-piston in-series design which comprises all essential functions that a solvent delivery system has to fulfill. Metering of solvent and delivery to the high-pressure side are performed by two pump assemblies which can generate pressure up to 1200 bar.

Each channel comprises a pump assembly including independent pump drive for each piston, pump head, inlet valve, outlet valve, solvent heat exchanger and an outlet filter. The two channels are fed into a low-volume mixing groove in an automatic purge valve and a Jet Weaver mixer, with 35 or 100 µl volume can be added downstream for optimum mixing performance.

A system pressure sensor, for monitoring the pump pressure, is attached to the purge valve, normally connected in the B-channel of the pump, before the mixing groove, in order to minimize delay volumes.

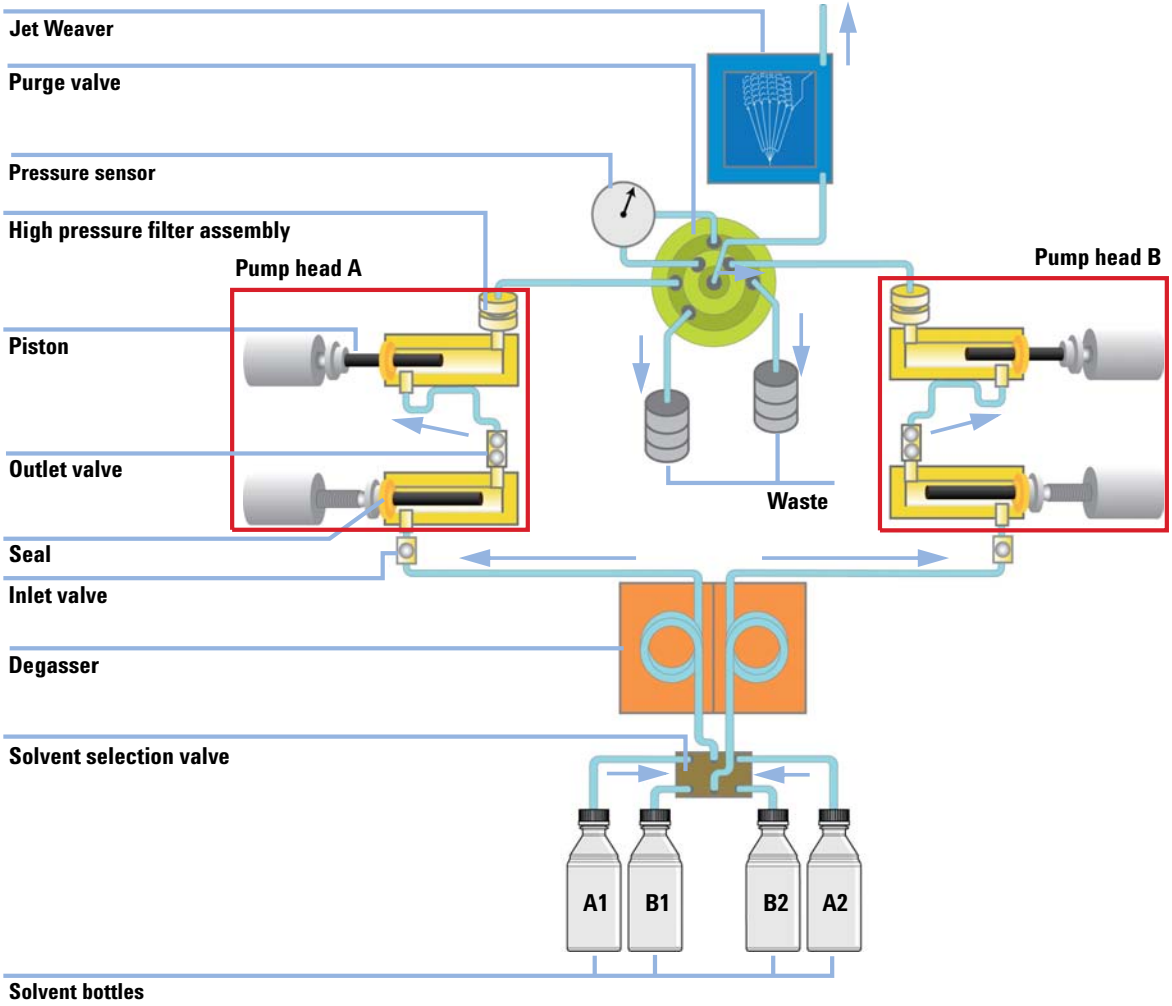

Figure 1 The hydraulic path

In the user interface the solvent in use for each channel can be selected in order to get optimum flow and composition accuracy. Although selecting the right solvent is not required for low ripple, especially for composition accuracy across pressure it is vital for the compensation algorithm to use the right solvent properties. The density of the solvents is increased under the influence of pressure and a certain displaced solvent will expand again when the pressure is released, for example across the column. In order to achieve

the correct volumetric flow while sample passes through the detector it is necessary to correct for density related flow inaccuracies in the pump module.

In order to always deliver the best possible pressure stability, the pump constantly tunes the delivery cycle for elasticity and dead volume effects. With this feature the pump is able to deliver a stable and accurate flow without requiring individual calibration settings. A further feature of the control and compensation algorithm is leak correction. With this it is even possible to compensate for minor leaks in primary pump chamber (inlet valve and seal), without the performance of the pump being affected.

To increase the robustness of the pump it uses a fast defill function which reduces the delivery time of the primary piston, thereby reducing the net effects of leaks considerably. Furthermore each pump channel has only two valves on its two pump heads which also reduce the potential of failures. In order to reduce stresses on the pump hardware, it uses a smooth motion control, which slowly increases or decreases the speed of the pistons to prevent shock movements. In order to be able to control these movements a high resolution encoder unit is attached to the pump drives which resolves a revolution into 65000 steps, and each step translates to a volume of about 300 pl.

Early Maintenance Feedback

Maintenance requires the exchange of components which are subject to wear or stress. Ideally, the frequency at which components are exchanged should be based on the intensity of usage of the module and the analytical conditions, and not on a predefined time interval. The early maintenance feedback (EMF) feature monitors the usage of specific components in the instrument, and provides feedback when the user-selectable limits have been exceeded. The visual feedback in the user interface provides an indication that maintenance procedures should be scheduled.

EMF Counters

EMF counters increment with use and can be assigned a maximum limit which provides visual feedback in the user interface when the limit is exceeded. Some counters can be reset to zero after the required maintenance procedure.

Using the EMF Counters

The user-settable **EMF** limits for the **EMF Counters** enable the early maintenance feedback to be adapted to specific user requirements. The useful maintenance cycle is dependent on the requirements for use. Therefore, the definition of the maximum limits need to be determined based on the specific operating conditions of the instrument.

Setting the EMF Limits

The setting of the **EMF** limits must be optimized over one or two maintenance cycles. Initially the default **EMF** limits should be set. When instrument performance indicates maintenance is necessary, take note of the values displayed by the **EMF counters**. Enter these values (or values slightly less than the displayed values) as **EMF** limits, and then reset the **EMF counters** to zero. The next time the **EMF counters** exceed the new **EMF** limits, the **EMF** flag will be displayed, providing a reminder that maintenance needs to be scheduled.

Instrument Layout

The industrial design of the module incorporates several innovative features. It uses Agilent's E-PAC concept for the packaging of electronics and mechanical assemblies. This concept is based upon the use of expanded polypropylene (EPP) layers of foam plastic spacers in which the mechanical and electronic boards components of the module are placed. This pack is then housed in a metal inner cabinet which is enclosed by a plastic external cabinet. The advantages of this packaging technology are:

- virtual elimination of fixing screws, bolts or ties, reducing the number of components and increasing the speed of assembly/disassembly,
- the plastic layers have air channels molded into them so that cooling air can be guided exactly to the required locations,
- the plastic layers help cushion the electronic and mechanical parts from physical shock, and
- the metal inner cabinet shields the internal electronics from electromagnetic interference and also helps to reduce or eliminate radio frequency emissions from the instrument itself.

Interfaces

The Agilent 1290 Infinity modules provide the following interfaces:

Table 1 Agilent 1290 Infinity interfaces

Module	CAN	LAN/BCD (optional)	LAN (on-board)	RS-232	Analog	APG Remote	Comment
G4220A/B	2	no	yes	yes	no	yes	
G4226A	2	yes	no	yes	no	yes	
G1316C	2	no	no	yes	no	yes	
G4227A	2	no	no	no	no	no	
G4212A	2	no	yes	yes	1	yes	Preferred host for LAN access

NOTE The detector with on-board LAN is the preferred access point for control via LAN of the detector and/or the 1290 Infinity system. The inter-module communication is done via CAN.

- CAN connectors as interface to other modules,
- LAN connector as interface to the Agilent ChemStation or other control software,
- RS-232C as interface to a computer,
- REMOTE connector as interface to other Agilent products,
- Analog Output connector(s) for signal output.

Overview Interfaces

CAN

The CAN is inter-module communication interface. It is a 2-wire serial bus system supporting high speed data communication and real-time requirement.

LAN

The modules have either an interface slot for an LAN card (e.g. Agilent G1369A LAN Interface) or they have an on-board LAN interface. This interface allows the control of the module/system via a connected PC with the appropriate control software (e.g. Agilent ChemStation). Exception: The G1316 TCC and the G1322/G1379 degasser have neither on-board LAN nor a LAN interface.

NOTE If an Agilent detector (DAD/MWD/FLD/VWD/RID) is in the system, the LAN must be connected to the DAD/MWD/FLD/VWD/RID (due to higher data load). If no Agilent detector is part of the system, the LAN interface should be installed in the pump or autosampler.

RS-232C (Serial)

The RS-232C connector is used to control the module from a computer through RS-232C connection, using the appropriate software. This connector can be configured with the configuration switch module. Refer to *"Communication Settings for RS-232C"*.

NOTE There is no configuration possible on main boards with on-board LAN. These are pre-configured for

- 19200 baud,
- 8 data bit with no parity and
- one start bit and one stop bit are always used (not selectable).

The RS-232C is designed as DCE (data communication equipment) with a 9-pin male SUB-D type connector. The pins are defined as:

Table 2 RS-232C Connection Table

Pin	Direction	Function
1	In	DCD
2	In	RxD
3	Out	TxD
4	Out	DTR
5		Ground
6	In	DSR
7	Out	RTS
8	In	CTS
9	In	RI

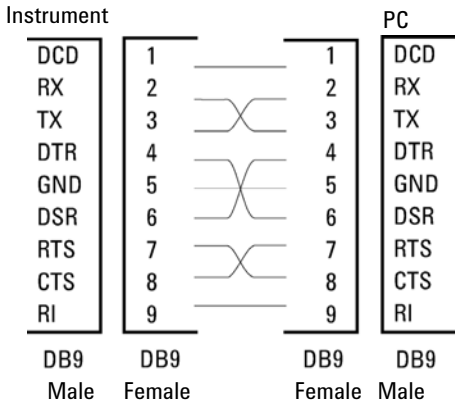

Figure 2 RS-232 Cable

Analog Signal Output

The analog signal output (e.g. detector signal or pump pressure signal) can be distributed to a recording device.

APG Remote

The APG Remote connector may be used in combination with other analytical instruments from Agilent Technologies if you want to use features as common shut down, prepare, and so on.

Remote control allows easy connection between single instruments or systems to ensure coordinated analysis with simple coupling requirements.

The subminiature D connector is used. The module provides one remote connector which is inputs/outputs (wired- or technique).

To provide maximum safety within a distributed analysis system, one line is dedicated to SHUT DOWN the system's critical parts in case any module detects a serious problem. To detect whether all participating modules are switched on or properly powered, one line is defined to summarize the POWER ON state of all connected modules. Control of analysis is maintained by signal readiness READY for next analysis, followed by START of run and optional STOP of run triggered on the respective lines. In addition PREPARE and START REQUEST may be issued. The signal levels are defined as:

- standard TTL levels (0 V is logic true, + 5.0 V is false),
- fan-out is 10,
- input load is 2.2 kOhm against + 5.0 V, and
- output are open collector type, inputs/outputs (wired- or technique).

NOTE All common TTL circuits operate with a 5 V power supply. A TTL signal is defined as "low" or L when between 0 V and 0.8 V and "high" or H when between 2.0 V and 5.0 V (with respect to the ground terminal).

Table 3 Remote Signal Distribution

Pin	Signal	Description
1	DGND	Digital ground
2	PREPARE	(L) Request to prepare for analysis (for example, calibration, detector lamp on). Receiver is any module performing pre-analysis activities.
3	START	(L) Request to start run / timetable. Receiver is any module performing run-time controlled activities.
4	SHUT DOWN	(L) System has serious problem (for example, leak: stops pump). Receiver is any module capable to reduce safety risk.

Table 3 Remote Signal Distribution

Pin	Signal	Description
5		Not used
6	POWER ON	(H) All modules connected to system are switched on. Receiver is any module relying on operation of others.
7	READY	(H) System is ready for next analysis. Receiver is any sequence controller.
8	STOP	(L) Request to reach system ready state as soon as possible (for example, stop run, abort or finish and stop injection). Receiver is any module performing run-time controlled activities.
9	START REQUEST	(L) Request to start injection cycle (for example, by start key on any module). Receiver is the autosampler.

Special Interfaces

Some modules have module specific interfaces/connectors. They are described in the module documentation.

Setting the 8-bit Configuration Switch

Setting the 8-bit Configuration Switch (On-Board LAN)

The 8-bit configuration switch is located at the rear of the module. Switch settings provide configuration parameters for LAN, serial communication protocol and instrument specific initialization procedures.with on-board-LAN

All modules with on-board LAN, e.g. G1315/65C/D, G1314D/E, G4212A/B, G4220A/B:

- Default is ALL switches DOWN (best settings) - Bootp mode for LAN.
- For specific LAN modes switches 3-8 must be set as required.
- For boot/test modes switches 1+2 must be UP plus required mode.

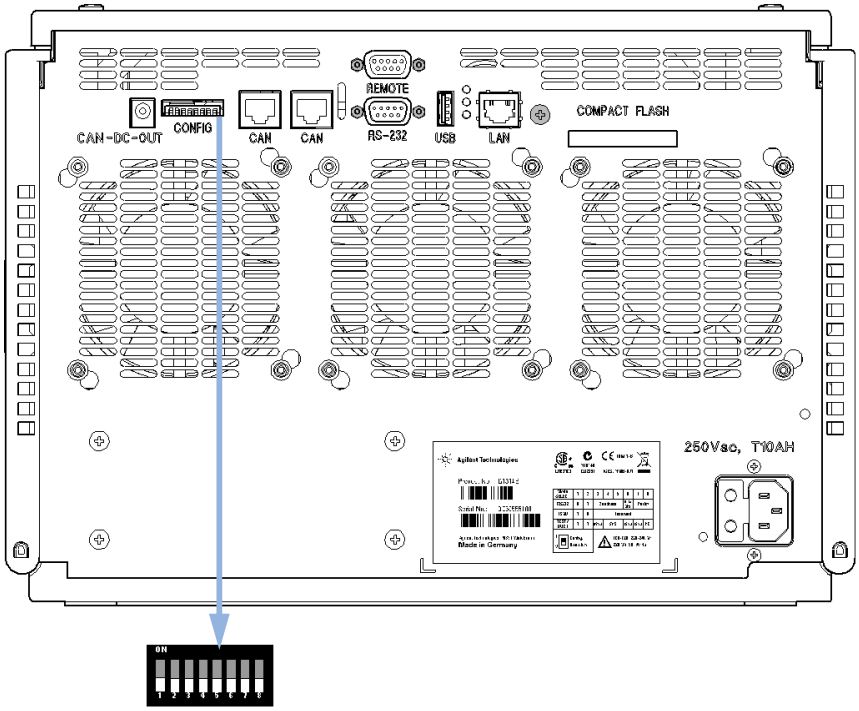

Figure 3 Location of Configuration Switch

NOTE To perform any LAN configuration, SW1 and SW2 must be set to OFF. For details on the LAN settings/configuration refer to chapter “LAN Configuration”.

Table 4 8-bit Configuration Switch

	Mode		Function					
	SW 1	SW 2	SW 3	SW 4	SW 5	SW 6	SW 7	SW 8
LAN	*0*	*0*	Link Configuration			Init Mode Selection		
Auto-negotiation			*0*	x	x	x	x	x
10 MBit, half-duplex			1	*0*	*0*	x	x	x
10 MBit, full-duplex			1	*0*	1	x	x	x
100 MBit, half-duplex			1	1	*0*	x	x	x
100 MBit, full-duplex			1	1	1	x	x	x
Bootp			x	x	x	*0*	*0*	*0*
Bootp & Store			x	x	x	*0*	*0*	1
Using Stored			x	x	x	*0*	1	*0*
Using Default			x	x	x	*0*	1	1
TEST	1	1	System					NVRAM
Boot Resident System			1					x
Revert to Default Data (Coldstart)			x	x	x			1

Legend:

0 (switch down), 1 (switch up), x (any position)

NOTE When selecting the mode TEST, the LAN settings are: Auto-Negotiation & Using Stored.

Setting the 8-bit Configuration Switch (without On-Board LAN)

The 8-bit configuration switch is located at the rear of the module.

Modules that do not have their own LAN interface (e.g. the TCC) can be controlled through the LAN interface of another module and a CAN connection to that module.

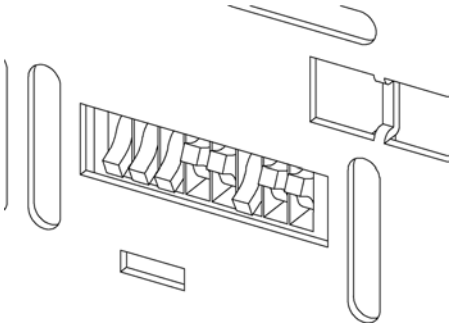

Figure 4 Configuration switch (settings depend on configured mode)

All modules without on-board LAN:

- default is ALL DIPS DOWN (best settings)
- for GPIB DIPS 4-8 must be set as required
- for boot/test modes DIPS 1+2 must be UP plus required mode

Switch settings provide configuration parameters for GPIB address, serial communication protocol and instrument specific initialization procedures.

Table 5 8-bit Configuration Switch

Mode Select	1	2	3	4	5	6	7	8
GPIB	0	0		GPIB Address				
RS-232C	0	1	Baudrate			Data Bits	Parity	
Reserved	1	0	Reserved					
TEST/BOOT	1	1	RSVD	SYS		RSVD	RSVD	FC

NOTE The LAN settings are done on the LAN Interface Card G1369A. Refer to the documentation provided with the card.

Communication Settings for RS-232C

The communication protocol used in the column compartment supports only hardware handshake (CTS/RTR).

Switches 1 in down and 2 in up position define that the RS-232C parameters will be changed. Once the change has been completed, the column instrument must be powered up again in order to store the values in the non-volatile memory.

Table 6 Communication Settings for RS-232C Communication

Mode Select	1	2	3	4	5	6	7	8
RS-232C	0	1	Baudrate			Data Bits	Parity	

Use the following tables for selecting the setting which you want to use for RS-232C communication. The number 0 means that the switch is down and 1 means that the switch is up.

Table 7 Baudrate Settings

Switches			Baud Rate	Switches			Baud Rate
3	**4**	**5**		**3**	**4**	**5**	
0	0	0	9600	1	0	0	9600
0	0	1	1200	1	0	1	14400
0	1	0	2400	1	1	0	19200
0	1	1	4800	1	1	1	38400

Table 8 Data Bit Settings

Switch 6	Data Word Size
0	7 Bit Communication
1	8 Bit Communication

Table 9 Parity Settings

Switches		Parity
7	8	
0	0	No Parity
1	0	Odd Parity
1	1	Even Parity

One start bit and one stop bit are always used (not selectable).

Per default, the module will turn into 19200 baud, 8 data bit with no parity.

Special Settings

The special settings are required for specific actions (normally in a service case).

NOTE The tables include both settings for modules – with on-board LAN and without on-board LAN. They are identified as “LAN” and “no LAN”.

Boot-Resident

Firmware update procedures may require this mode in case of firmware loading errors (main firmware part).

If you use the following switch settings and power the instrument up again, the instrument firmware stays in the resident mode. It is not operable as a

module. It only uses basic functions of the operating system for example, for communication. In this mode the main firmware can be loaded (using update utilities).

Table 10 Boot Resident Settings

	Mode Select	SW1	SW2	SW3	SW4	SW5	SW6	SW7	SW8
LAN	TEST/BOOT	1	1	1	0	0	0	0	0
No LAN	TEST/BOOT	1	1	0	0	1	0	0	0

Forced Cold Start

A forced cold start can be used to bring the module into a defined mode with default parameter settings.

CAUTION

Loss of data

Forced cold start erases all methods and data stored in the non-volatile memory. Exceptions are diagnosis and repair log books which will not be erased.

→ Save your methods and data before executing a forced cold start.

If you use the following switch settings and power the instrument up again, a forced cold start has been completed.

Table 11 Forced Cold Start Settings

	Mode Select	SW1	SW2	SW3	SW4	SW5	SW6	SW7	SW8
LAN	TEST/BOOT	1	1	0	0	0	0	0	1
No LAN	TEST/BOOT	1	1	0	0	1	0	0	1

2
Site Requirements and Specifications

This chapter provides information on environmental requirements, physical and performance specifications.

Site Requirements

A suitable environment is important to ensure optimal performance of the instrument.

Power Consideration

The module power supply has wide ranging capabilities and accepts any line voltage in the range mentioned in Table 12 on page 33. Consequently, there is no voltage selector in the rear of the module. There are also no externally accessible fuses, because automatic electronic fuses are implemented in the power supply.

WARNING

Module is partially energized when switched off, as long as the power cord is plugged in.

Repair work at the module can lead to personal injuries, e.g. shock hazard, when the cover is opened and the module is connected to power.

➔ Make sure that it is always possible to access the power plug.

➔ Remove the power cable from the instrument before opening the cover.

➔ Do not connect the power cable to the Instrument while the covers are removed.

WARNING

Incorrect line voltage at the module

Shock hazard or damage of your instrument can result if the devices are connected to line voltage higher than specified.

➔ Connect your module to the specified line voltage.

CAUTION

Unaccessable power plug.

In case of emergency it must be possible to disconnect the instrument from the power line at any time.

- ➔ Make sure the power connector of the instrument can be easily reached and unplugged.
- ➔ Provide sufficient space behind the power socket of the instrument to unplug the cable.

Power Cords

Different power cords are offered as options with the module. The female end of all power cords is identical. It plugs into the power-input socket at the rear. The male end of each power cord is different and designed to match the wall socket of a particular country or region.

WARNING

Absence of ground connection or use of unspecified power cord

The absence of ground connection or the use of unspecified power cord can lead to electric shock or short circuit.

- ➔ Never operate your instrumentation from a power outlet that has no ground connection.
- ➔ Never use a power cord other than the Agilent Technologies power cord designed for your region.

WARNING

Use of unsupplied cables

Using cables not supplied by Agilent Technologies can lead to damage of the electronic components or personal injury.

- ➔ Never use cables other than the ones supplied by Agilent Technologies to ensure proper functionality and compliance with safety or EMC regulations.

WARNING

Unintended use of supplied power cords

Using power cords for unintended purposes can lead to personal injury or damage of electronic equipment.

➔ Never use the power cords that Agilent Technologies supplies with this instrument for any other equipment.

Bench Space

The module dimensions and weight (see Table 12 on page 33) allow you to place the module on almost any desk or laboratory bench. It needs an additional 2.5 cm (1.0 inches) of space on either side and approximately 8 cm (3.1 inches) in the rear for air circulation and electric connections.

If the bench should carry an Agilent system, make sure that the bench is designed to bear the weight of all modules.

The module should be operated in a horizontal position.

Condensation

CAUTION

Condensation within the module

Condensation will damage the system electronics.

➔ Do not store, ship or use your module under conditions where temperature fluctuations could cause condensation within the module.

➔ If your module was shipped in cold weather, leave it in its box and allow it to warm slowly to room temperature to avoid condensation.

Physical Specifications

Table 12 Physical Specifications

Type	Specification	Comments
Weight	21.8 kg (48 lbs)	
Dimensions (height × width × depth)	240 x 345 x 435 mm (9.3 x 13.5 x 17 inches)	
Line voltage	100 – 240 VAC, ± 10%	Wide-ranging capability
Line frequency	50 or 60 Hz, ± 5%	
Power consumption	350 VA / 270 W / 922 BTU	Maximum
Ambient operating temperature	4–55 °C (41–131 °F)	
Ambient non-operating temperature	-40–70 °C (-4–158 °F)	
Humidity	< 95%, at 25–40 °C (77–104 °F)	Non-condensing
Operating Altitude	Up to 2000 m (6562 ft)	
Non-operating altitude	Up to 4600 m (15091 ft)	For storing the module
Safety standards: IEC, CSA, UL	Installation Category II, Pollution Degree 2	For indoor use only.

Specifications

Table 13 Performance specifications

Type	Specification	Comments
Hydraulic system	Two dual pistons in series pumps with proprietary servo-controlled variable stroke design and smooth motion control.	
Settable flow range	Setpoints 0.001 —2 ml/min, in 0.001 ml/min increments.	Executed in 300 pl/step increments
Flow precision	0.07 % RSD or 0.005 min SD, whatever is greater 0.2 —2.0 ml/min).	Based on retention time at constant room temperature.
Flow accuracy	±1 % or 10 µl/min, whatever is greater.	Measured with water
Pressure	Operating pressure range 50 — 1050 bar, up to 2 ml/min.	
Pressure pulsation	<1 % or <5 bar, whatever is greater.	At 1 ml/min water
Compressibility compensation	Automatic, pre-defined, based on mobile phase selection.	LabAdvisor will support calibrating own specific solvent mixtures
pH-range	1.0 — 12.5	Solvents with pH <2.3 should not contain acid which attack stainless steel.
Gradient formation	High pressure binary mixing.	
Delay volume	Jet Weaver V35: <40 µl Jet Weaver V100: <75 µl	The use of Jet Weaver is recommended. For certain applications even lower delay volumes are possible without Jet Weaver. Delay volume is determined by volume of the connecting capillary.
Composition range	Settable range: 0.0 — 100.0 %	Recommended range: 1 — 99 % or 2 µl/min per channel, whatever is greater.
Composition precision	<0.15 % RSD, or 0.01 SD, whatever is greater.	0.2 —2.0 ml/min
Composition accuracy	±0.35 % absolute from 5 — 95 %, from 0.2 — 2.0 ml/min	Water/caffeine tracer

Table 13 Performance specifications

Type	Specification	Comments
Solvent selection valve	Yes	Standard part of the pump
Control	Agilent ChemStation for LC (32-bit) MassHunter Lab Advisor Instant Pilot (Hobbit) EZChrom Elite	B.04.02 DSP3 B.04.00 and B.03.01 SP2 B.01.04 B.02.11 3.3.2 SP2
Communications	Controller-area network (CAN), RS232C, APG remote: ready, start, stop and shutdown signals, LAN	
Safety and maintenance	Extensive diagnostics, error detection and display (through Agilent Lab Advisor), leak detection, safe leak handling, leak output signal for shutdown of the pumping system. Low voltage in major maintenance areas.	
GLP features	Early maintenance feedback (EMF) for continuos tracking of instrument usage in terms of purge valve switches and volume of pumped mobile phase with pre-defined and user settable limits and feedback messages. Electronic records of maintenance and errors.	
Housing	All materials recyclable.	

3
Installing the Module

This chapter gives information about the preferred stack setup for your system and the installation of your Agilent 1290 Infinity Binary Pump.

Unpacking the Module

Damaged Packaging

If the delivery packaging shows signs of external damage, please call your Agilent Technologies sales and service office immediately. Inform your service representative that the instrument may have been damaged during shipment.

CAUTION

"Defective on arrival" problems

If there are signs of damage, please do not attempt to install the module. Inspection by Agilent is required to evaluate if the instrument is in good condition or damaged.

- ➔ Notify your Agilent sales and service office about the damage.
- ➔ An Agilent service representative will inspect the instrument at your site and initiate appropriate actions.

Condensation

CAUTION

Condensation within the module

Condensation will damage the system electronics.

- ➔ Do not store, ship or use your module under conditions where temperature fluctuations could cause condensation within the module.
- ➔ If your module was shipped in cold weather, leave it in its box and allow it to warm slowly to room temperature to avoid condensation.

Delivery Checklist

Ensure that all parts and materials have been delivered with your module. The delivery checklist is shown below. For parts identification please check the illustrated part lists in “Parts and Materials for Maintenance” on page 205.

Please report any missing or damaged parts to your local Agilent Technologies sales and service office.

Table 14 Binary Pump Checklist

Description	Quantity
1290 Infinity Bin Pump User Manual	1
1290 Infinity System Manual	1
Agilent Lab Advisor	1
LC HW User Information & Utilities DVD	1
Power Cord	1
Solvent Cabinet Kit with 4 bottles	1
Accessory Kit (see "Accessory Kit" on page 217)	1
RRHD Eclipse Plus C18, 2.1x50 mm, 1.8 u	1

Optimizing the Stack Configuration

If your module is part of a complete Agilent 1290 Infinity Liquid Chromatograph, you can ensure optimum performance by installing the following configurations. These configurations optimize the system flow path, ensuring minimum delay volume.

For other possible configurations, please refer to the Agilent 1290 Infinity System Manual.

One Stack Configuration

Ensure optimum performance by installing the modules of the Agilent 1290 Infinity LC System in the following configuration (See Figure 5 on page 41 and Figure 6 on page 42). This configuration optimizes the flow path for minimum delay volume and minimizes the bench space required.

The Agilent 1290 Infinity Binary Pump should always be installed at the bottom of the stack.

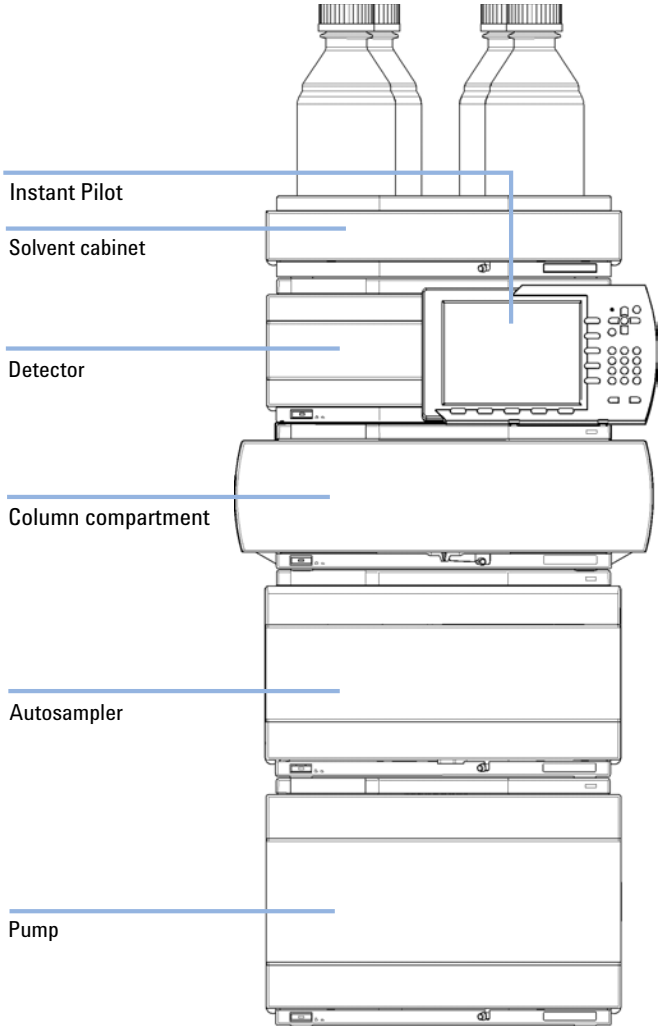

Figure 5 Recommended Stack Configuration (Front View)

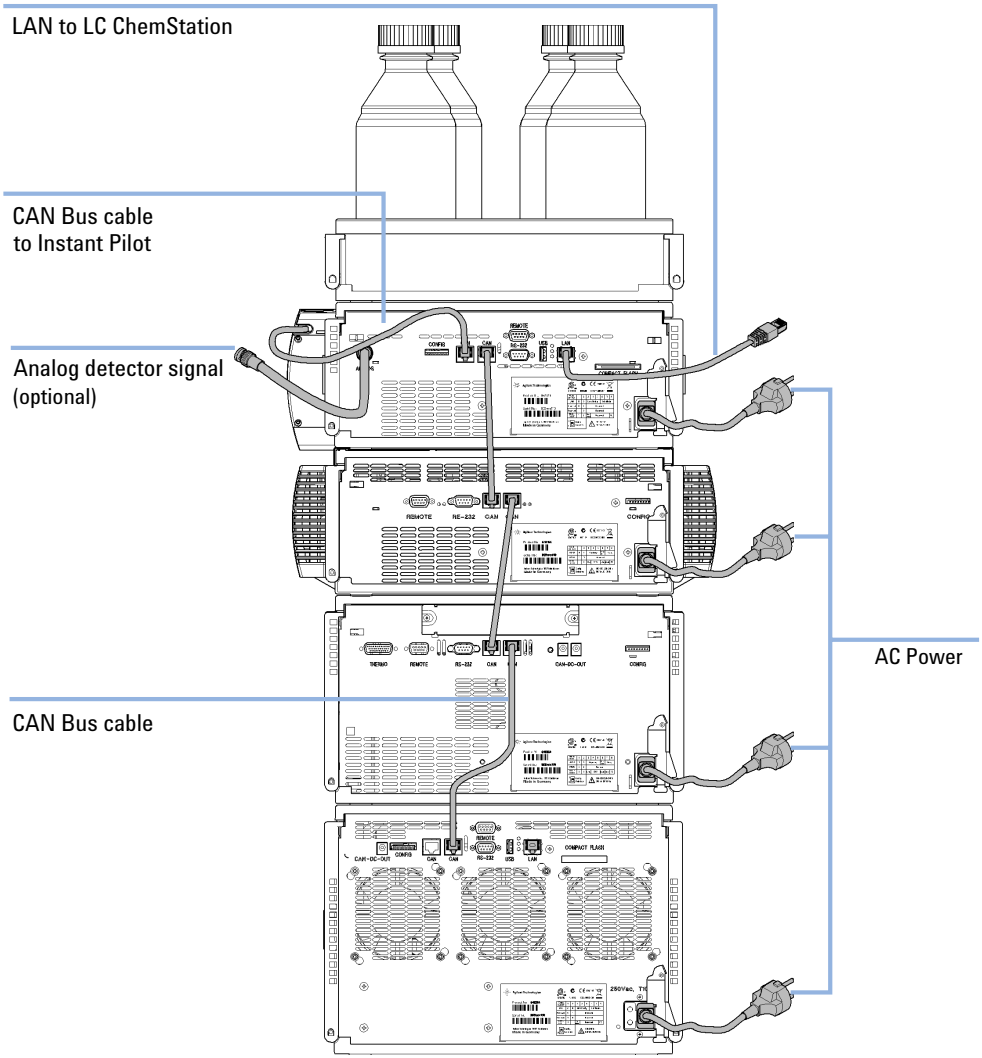

Figure 6 Recommended Stack Configuration (Rear View)

Two Stack Configuration

To avoid excessive height of the stack when the autosampler thermostat is added to the system it is recommended to form two stacks. Some users prefer the lower height of this arrangement even without the autosampler thermostat. A slightly longer capillary is required between the pump and autosampler. See Figure 7 on page 43 and Figure 8 on page 44).

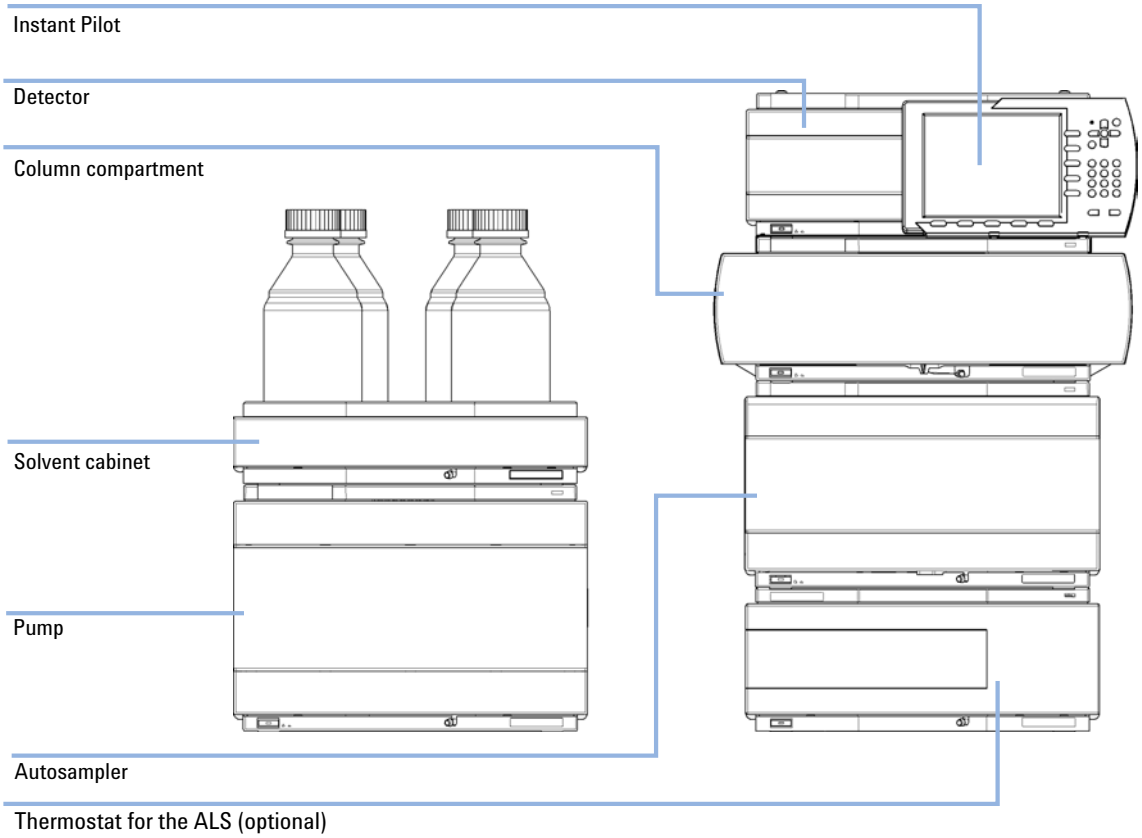

Figure 7 Recommended Two Stack Configuration (Front View)

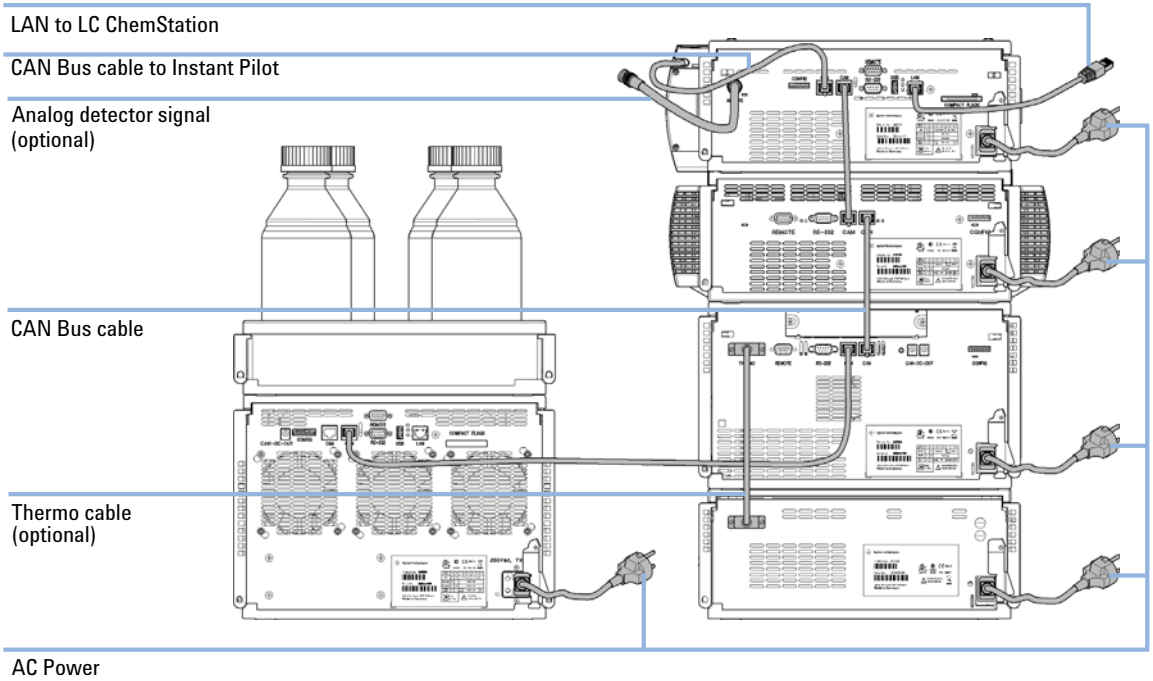

Figure 8 Recommended Two Stack Configuration (Rear View)

Removing the Transport Foam

1 Open the front cover of the module. 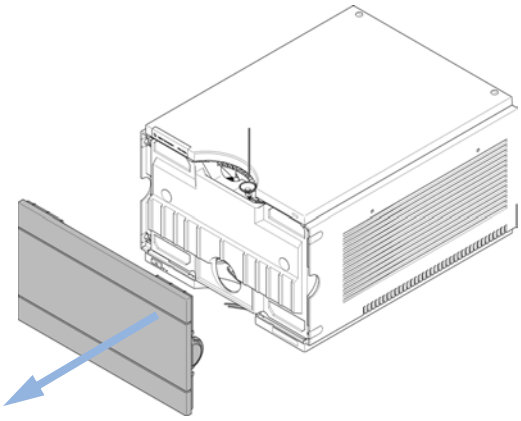	**2** Carfully remove the protective foam. 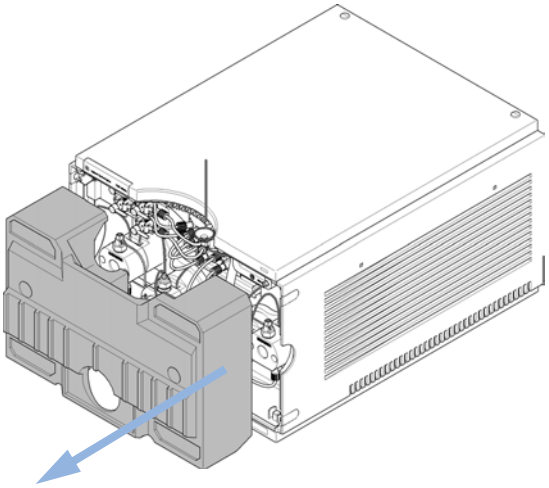
3 Close the front cover. 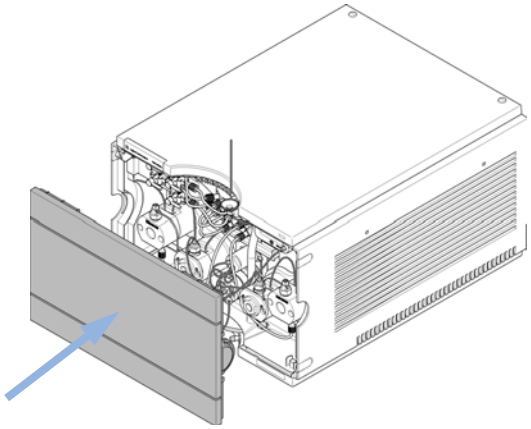	

Installing the Pump

Parts required

#	Description
1	Pump
1	Power cord
1	Agilent Control Software and/or Instant Pilot G4208

Preparations

Locate bench space

Provide power connections

Unpack the pump

1 Place the module on the bench in a horizontal position.

2 Ensure the power switch on the front of the module is OFF (switch stands out).

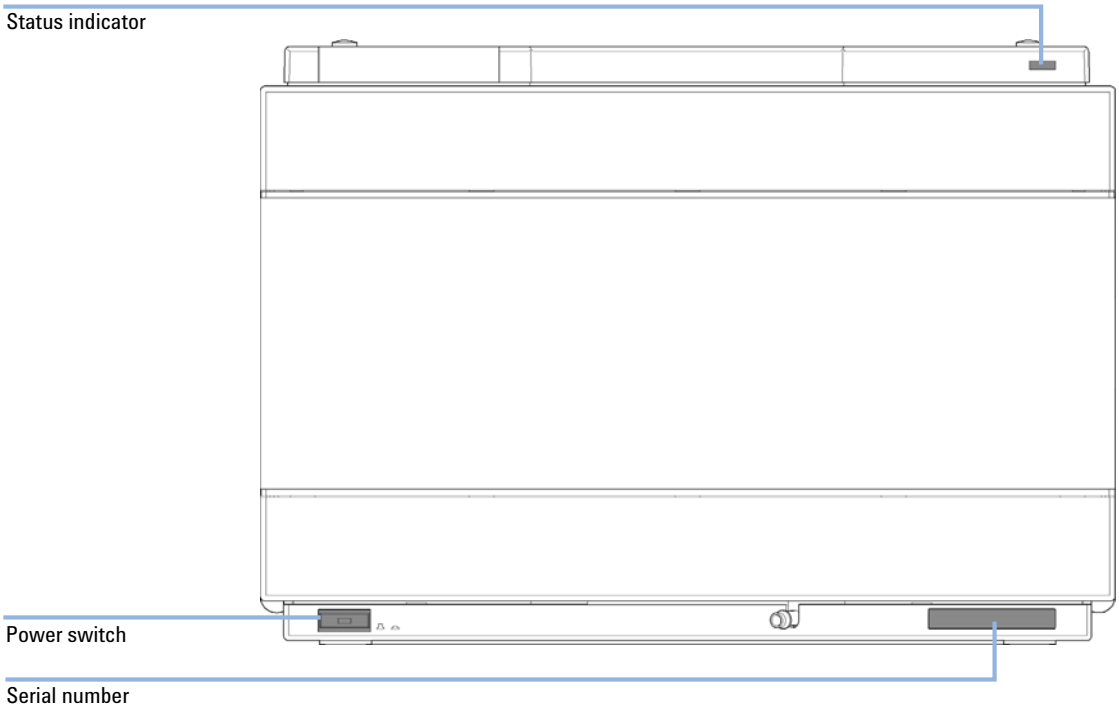

Figure 9 Front of Binary Pump

3 Connect the power cable to the power connector at the back of the 1290 Infinity Binary Pump.

4 Connect the required interface cables to the rear of the 1290 Infinity Binary Pump.

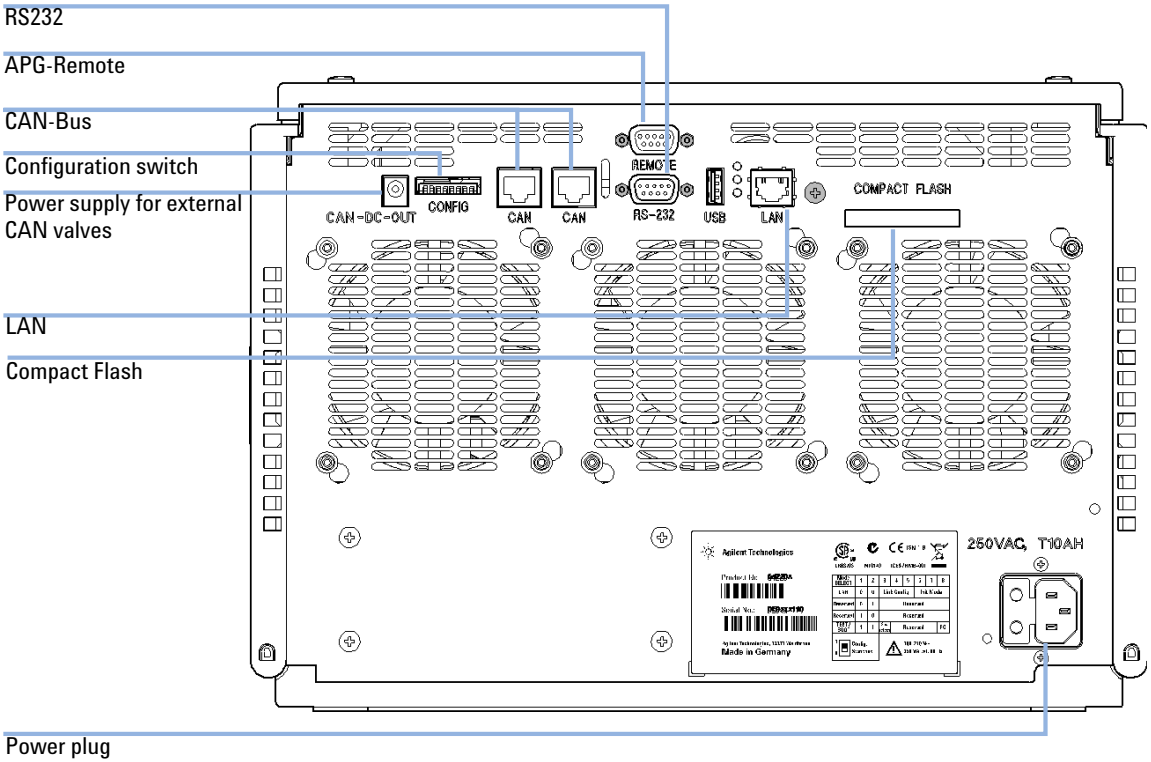

Figure 10 Rear of Binary Pump

NOTE

In an Agilent 1290 Infinity System, the individual modules are connected by CAN cables. An Agilent 1200 Series Instant Pilot can be connected to the CAN bus of any module. Connection to an Agilent data system is established through the built-in LAN port of the detector. The LAN port of the detector must be used as the detector generates the highest data rate of all modules. For more information about connecting the Instant Pilot or Agilent Data System, please refer to the respective user manual. For connecting the 1290 Infinity equipment to non-Agilent equipment, see Chapter *"Hardware Information"* in the *"Service Manual"*.

5 Turn on the power by pushing the button at the lower left hand side of the module.

The power button stays pressed in and the status LED should be green.

NOTE When the line power button stands out and the green light is off, the module is turned off.

NOTE The module was shipped with default configuration settings. For changing these settings, please refer to service manual "Setting the 8-bit configuration switch".

Flow connections to the pump

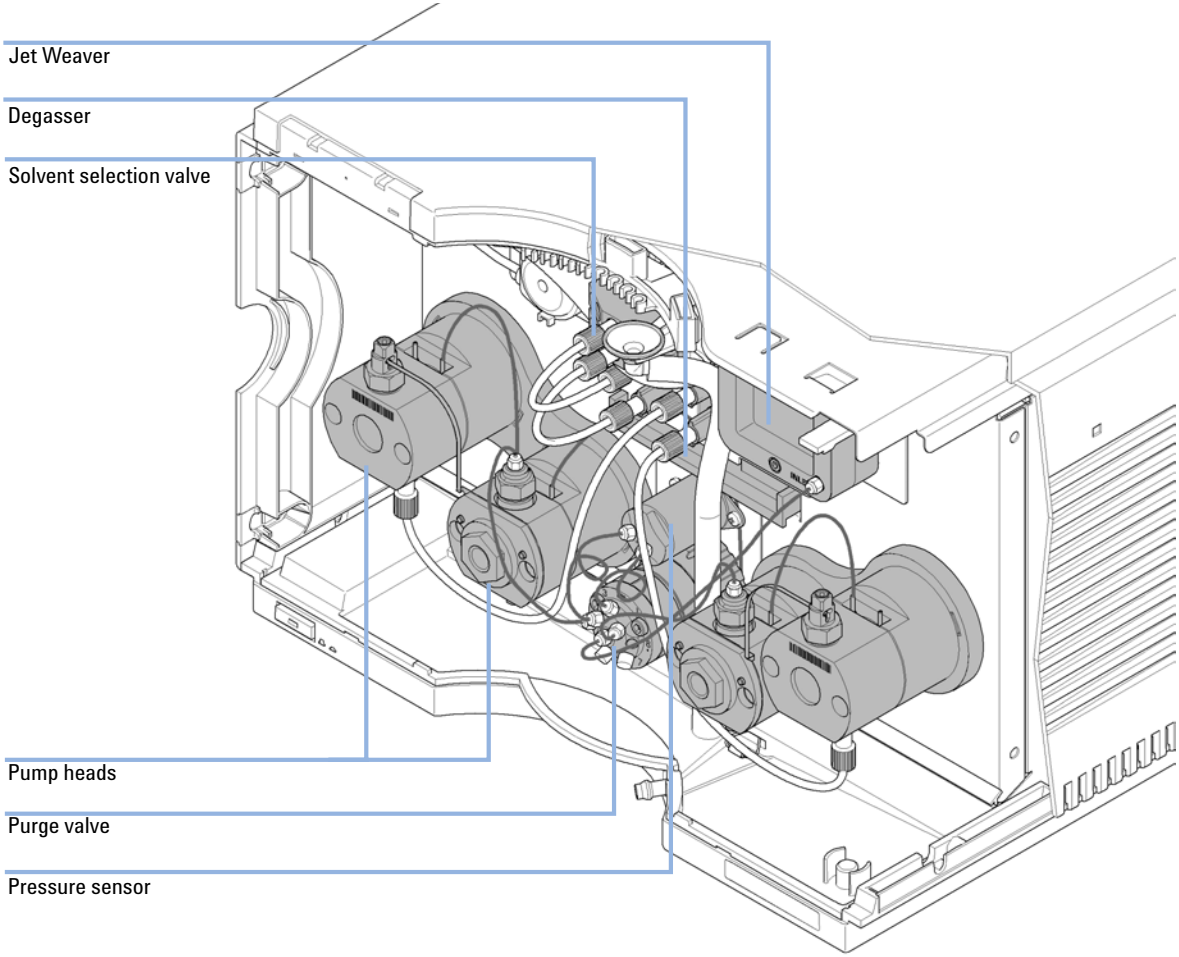

The pump is shipped with tubing and capillary connections installed between solvent selection valve, degassing unit, pump heads, pressure sensor, purge valve and Jet Weaver. This section describes the installation of additional flow connections.

Parts required

#	p/n	Description
1		Other modules
1	G4220-68705	Accessory kit
1	G5067-1531	Solvent Cabinet Kit

Preparations

Pump is installed in the LC system.

WARNING

Toxic, flammable and hazardous solvents, samples and reagents

The handling of solvents, samples and reagents can hold health and safety risks.

- ➔ When working with these substances observe appropriate safety procedures (for example by wearing goggles, safety gloves and protective clothing) as described in the material handling and safety data sheet supplied by the vendor and follow good laboratory practice.
- ➔ The amount of substances should be reduced to the minimal volume required for the analysis.
- ➔ Do not operate the instrument in an explosive atmosphere.

1 Remove the front cover by pressing the snap fasteners on both sides.

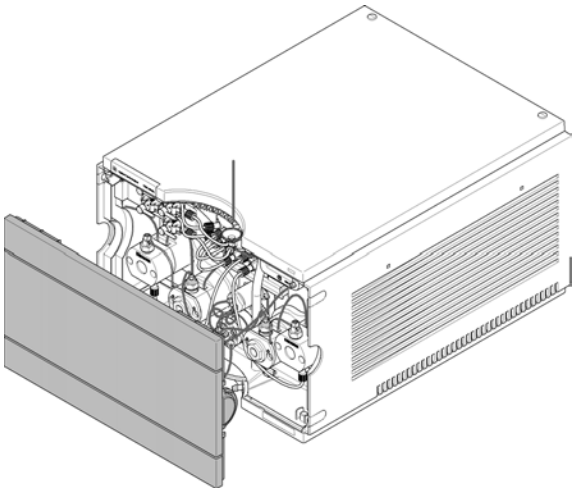

Figure 11 Removing the Front Cover

2 Place the solvent cabinet on top of the module stack that includes the 1290 Infinity Binary Pump.

3 Put the four bottles into the solvent cabinet and screw a bottle head assembly onto each bottle.

4 Install the shutoff valve panel at the top left corner of the instrument.

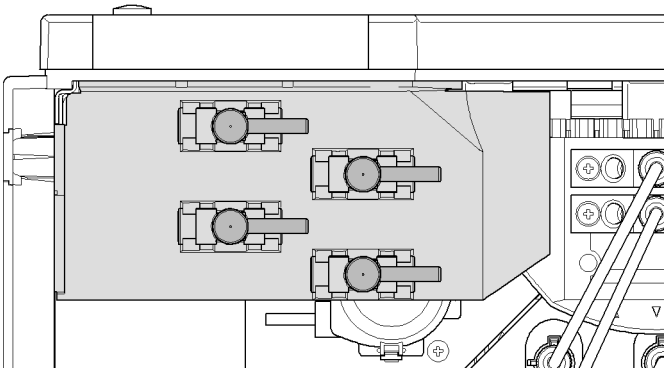

5 Connect the solvent tubes from the bottle head assemblies to the inlet connectors A1, A2, B1 and B2 of the solvent selection valves. Use the brown bottle for the aqueous solvent (usually channel A1).

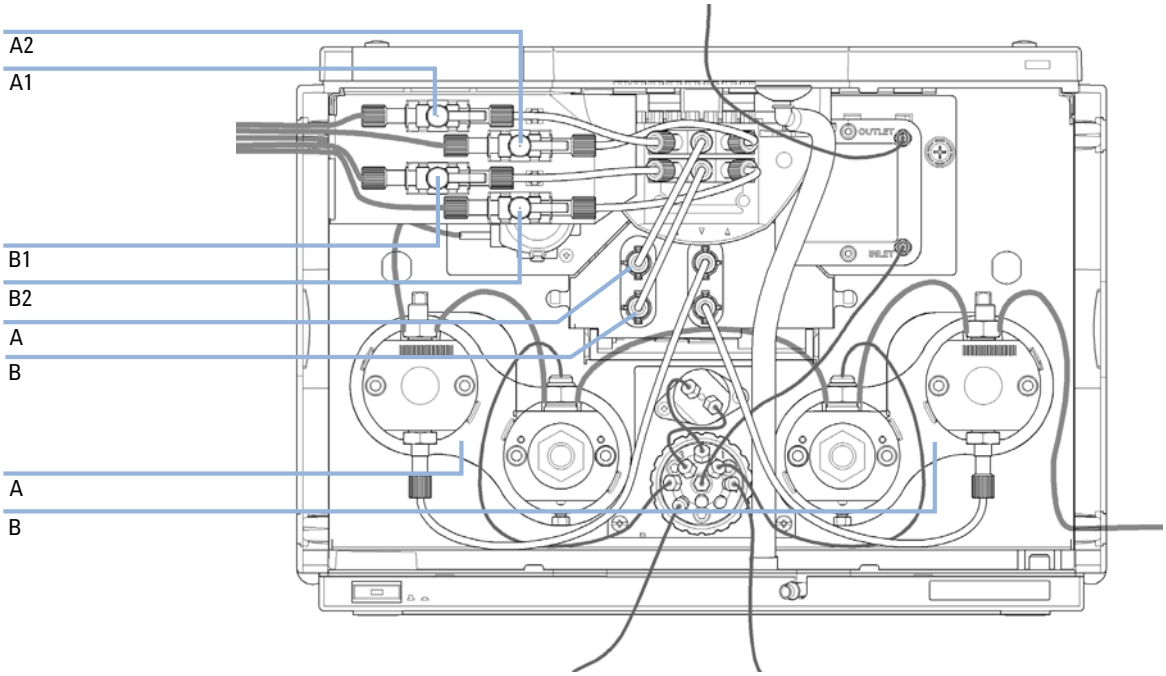

6 Label the tubes accordingly using the supplied stickers and fix the tubes in the clips of solvent cabinet and 1290 Infinity Binary Pump.

7 Connect the outlet of the Jet Weaver to the autosampler.

8 Connect Waste tubes (p/n G4220-67000) to the purge valve outlets at ports 5 and 6.

9 Connect the corrugated waste tube to the outlet of the leak panel.

10 Route the corrugated waste tube to a waste container.

11 Route drain tubes coming from modules on top of the pump through the pump.

12 Purge your system prior to the first use (see “Priming the Pump” on page 107).

Installation of seal wash option

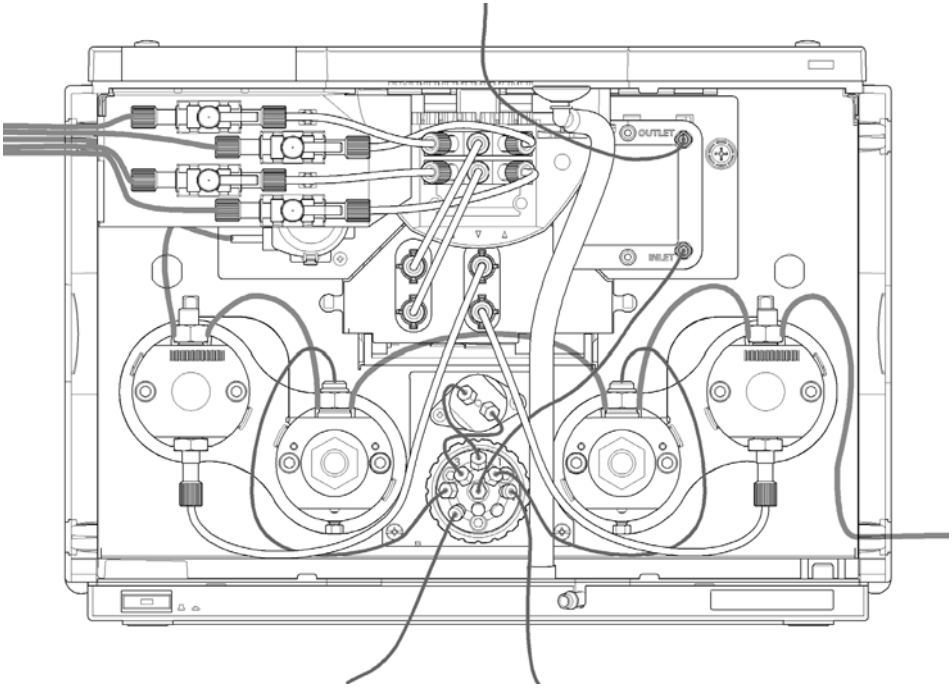

Figure 12 Binary Pump with Seal Wash Function

The 1290 Infinity Binary Pump is optionally available with a seal wash function. This option is recommended when using buffers or other non-volatile solvents or additives that could deposit on pistons and seals. It is used for regularly cleaning these parts automatically.

1. Place a wash solvent reservoir into the solvent cabinet. A mixture of distilled water and isopropanol (90/10) is a good choice for many applications.
2. Put the solvent inlet tube into the solvent reservoir, close it and connect the tube to the seal wash pump.
3. Route the outlet of the wash tube into a waste container.

Setting up the LAN access

Please follow the instructions in “LAN Configuration” on page 57

4
LAN Configuration

This chapter provides information on connecting the module to the Agilent ChemStation PC.

What You Have to Do First

The module has an on-board LAN communication interface.

1 Note the MAC (Media Access Control) address for further reference. The MAC or hardware address of the LAN interfaces is a world wide unique identifier. No other network device will have the same hardware address. The MAC address can be found on a label at the rear of the module underneath the configuration switch (see Figure 14 on page 59).

Part number of the pump main board
Revision Code, Vendor, Year and Week of assembly
MAC address
Country of Origin

Figure 13 MAC-Label

2 Connect the instrument's LAN interface (see Figure 14 on page 59) to
- the PC network card using a crossover network cable (point-to-point) or
- a hub or switch using a standard LAN cable.

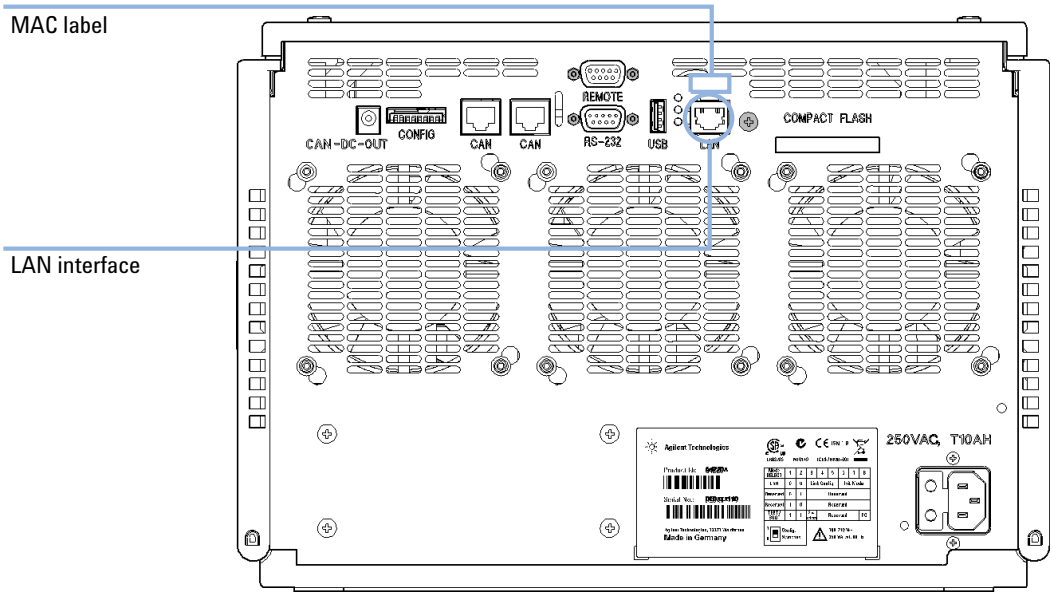

Figure 14 Location of LAN interfaces and MAC label

TCP/IP parameter configuration

To operate properly in a network environment, the LAN interface must be configured with valid TCP/IP network parameters. These parameters are:

- IP address
- Subnet Mask
- Default Gateway

The TCP/IP parameters can be configured by the following methods:

- by automatically requesting the parameters from a network-based BOOTP Server (using the so-called Bootstrap Protocol)
- by manually setting the parameters using Telnet
- by manually setting the parameters using the Instant Pilot (G4208A)

The LAN interface differentiates between several initialization modes. The initialization mode (short form 'init mode') defines how to determine the active TCP/IP parameters after power-on. The parameters may be derived from a Bootp cycle, non-volatile memory or initialized with known default values. The initialization mode is selected by the configuration switch, see Table 18 on page 67.

Configuration Switches (Nucleus)

The configuration switch can be accessed at the rear of the module.

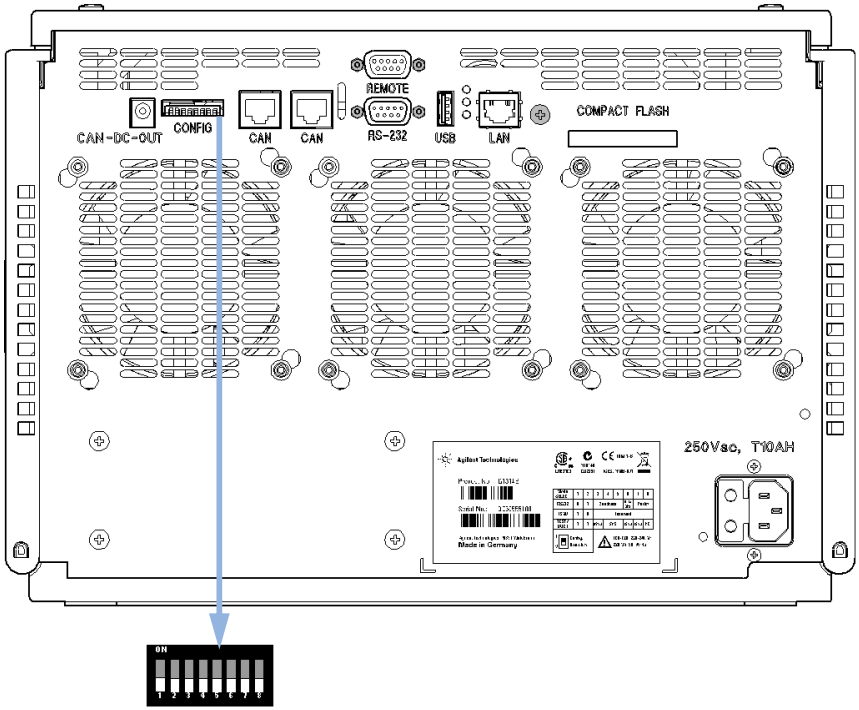

Figure 15 Location of Configuration Switch

The module is shipped with all switches set to OFF, as shown above.

NOTE To perform any LAN configuration, SW1 and SW2 must be set to OFF.

Table 15 Factory Default Settings

Initialization ('Init') Mode	Bootp, all switches down. For details see "Initialization mode selection (Nucleus)" on page 63
Link Configuration	speed and duplex mode determined by auto-negotiation, for details see "Link configuration selection (Nucleus)" on page 67

Initialization mode selection (Nucleus)

The following initialization (init) modes are selectable:

Table 16 Initialization Mode Switches

	SW 6	SW 7	SW 8	Init Mode
	OFF	OFF	OFF	Bootp
	OFF	OFF	ON	Bootp & Store
	OFF	ON	OFF	Using Stored
	OFF	ON	ON	Using Default

Bootp

When the initialization mode “Bootp” is selected, the module tries to download the parameters from a Bootp Server. The parameters obtained become the active parameters immediately. They are not stored to the non-volatile memory of the module. Therefore, the parameters are lost with the next power cycle of the module.

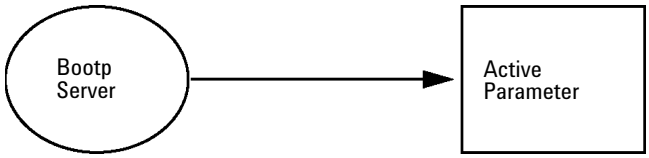

Figure 16 Bootp (Principle)

Bootp & Store

When “Bootp & Store” is selected, the parameters obtained from a Bootp Server become the active parameters immediately. In addition, they are stored to the non-volatile memory of the module. Thus, after a power cycle they are still available. This enables a kind of “bootp once” configuration of the module.

Example: The user may not want to have a Bootp Server be active in his network all the time. But on the other side, he may not have any other

configuration method than Bootp. In this case he starts the Bootp Server temporarily, powers on the module using the initialization mode “Bootp & Store”, waits for the Bootp cycle to be completed, closes the Bootp Server and powers off the module. Then he selects the initialization mode “Using Stored” and powers on the module again. From now on, he is able to establish the TCP/IP connection to the module with the parameters obtained in that single Bootp cycle.

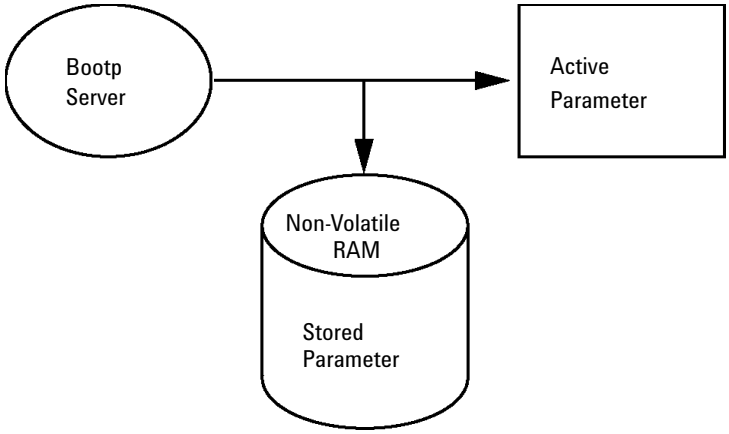

Figure 17 Bootp & Store (Principle)

NOTE Use the initialization mode “Bootp & Store” carefully, because writing to the non-volatile memory takes time. Therefore, when the module shall obtain its parameters from a Bootp Server every time it is powered on, the recommended initialization mode is “Bootp”!

Using Stored

When initialization mode “Using Stored” is selected, the parameters are taken from the non-volatile memory of the module. The TCP/IP connection will be established using these parameters. The parameters were configured previously by one of the described methods.

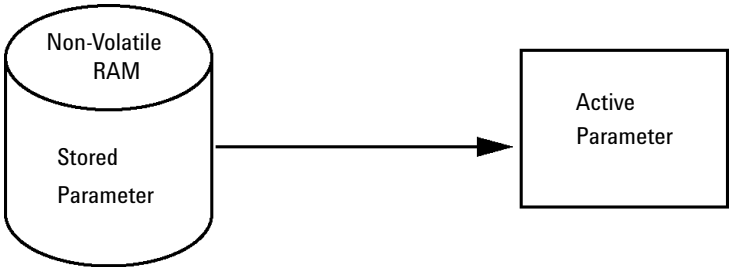

Figure 18 Using Stored (Principle)

Using Default

When “Using Default” is selected, the factory default parameters are taken instead. These parameters enable a TCP/IP connection to the LAN interface without further configuration, see Table 17 on page 65.

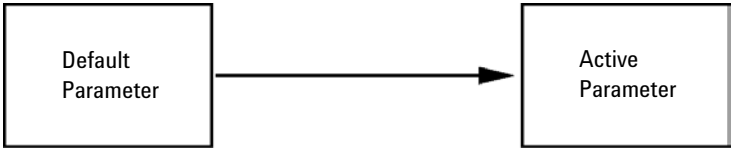

Figure 19 Using Default (Principle)

NOTE Using the default address in your local area network may result in network problems. Take care and change it to a valid address immediately.

Table 17 Using Default Parameters

IP address:	192.168.254.11
Subnet Mask:	255.255.255.0
Default Gateway	not specified

Since the default IP address is a so-called local address, it will not be routed by any network device. Thus, the PC and the module must reside in the same subnet.

The user may open a Telnet session using the default IP address and change the parameters stored in the non-volatile memory of the module. He may then close the session, select the initialization mode “Using Stored”, power-on again and establish the TCP/IP connection using the new parameters.

When the module is wired to the PC directly (e.g. using a cross-over cable or a local hub), separated from the local area network, the user may simply keep the default parameters to establish the TCP/IP connection.

NOTE

In the “Using Default” mode, the parameters stored in the memory of the module are not cleared automatically. If not changed by the user, they are still available, when switching back to the mode “Using Stored”.

Link configuration selection (Nucleus)

The LAN interface supports 10 or 100 Mbps operation in full- or half-duplex modes. In most cases, full-duplex is supported when the connecting network device - such as a network switch or hub - supports IEEE 802.3u auto-negotiation specifications.

When connecting to network devices that do not support auto-negotiation, the LAN interface will configure itself for 10- or 100-Mbps half-duplex operation.

For example, when connected to a non-negotiating 10-Mbps hub, the LAN interface will be automatically set to operate at 10-Mbps half-duplex.

If the module is not able to connect to the network through auto-negotiation, you can manually set the link operating mode using link configuration switches on the module.

Table 18 Link Configuration Switches

	SW 3	SW 4	SW 5	Link Configuration
	OFF	-	-	speed and duplex mode determined by auto-negotiation
	ON	OFF	OFF	manually set to 10 Mbps, half-duplex
	ON	OFF	ON	manually set to 10 Mbps, full-duplex
	ON	ON	OFF	manually set to 100 Mbps, half-duplex
	ON	ON	ON	manually set to 100 Mbps, full-duplex

Automatic configuration with Bootp (Nucleus)

When automatic configuration with Bootp is selected and the LAN interface is powered on, it broadcasts a BOOTP (Bootstrap Protocol) request that contains its MAC (hardware) address. A BOOTP server daemon searches its database for a matching MAC address, and if successful, sends the corresponding configuration parameters to the module as a BOOTP reply. These parameters become the active TCP/IP parameters immediately and the TCP/IP connection can be established.

About Agilent BootP Service

The Agilent BootP Service is used to assign the LAN Interface with an IP address.

The Agilent BootP Service is provided on the ChemStation DVD. The Agilent BootP Service is installed on a server or PC on the LAN to provide central administration of IP addresses for Agilent instruments on a LAN. The BootP service must be running TCP/IP network protocol and cannot run a DHCP server.

How BootP Service Works

When an instrument is powered on, an LAN Interface in the instrument broadcasts a request for an IP address or host name and provides its hardware MAC address as an identifier. The Agilent BootP Service answers this request and passes a previously defined IP address and host name associated with the hardware MAC address to the requesting instrument.

The instrument receives its IP address and host name and maintains the IP address as long as it is powered on. Powering down the instrument causes it to lose its IP address, so the Agilent BootP Service must be running every time the instrument powers up. If the Agilent BootP Service runs in the background, the instrument will receive its IP address on power-up.

The Agilent LAN Interface can be set to store the IP address and will not lose the IP address if power cycled.

Situation: Cannot Establish LAN Communication

If a LAN communication with BootP service cannot be established, check the following on the PC:

- Is the BootP service started? During installation of BootP, the service is not started automatically.
- Does the Firewall block the BootP service? Add the BootP service as an exception.
- Is the LAN Interface using the BootP-mode instead of using "stored or default modes?

Installation of BootP Service

Before installing and configuring the Agilent BootP Service, be sure to have the IP addresses of the computer and instruments on hand.

1. Log on as Administrator or other user with Administrator privileges.
2. Close all Windows programs.
3. Insert the Agilent ChemStation software DVD into the drive. If the setup program starts automatically, click **Cancel** to stop it.
4. Open Windows Explorer.
5. Go to the BootP directory on the Agilent ChemStation DVD and double-click **BootPPackage.msi**.
6. If necessary, click the **Agilent BootP Service...** icon in the task bar.
7. The **Welcome** screen of the **Agilent BootP Service Setup Wizard** appears. Click **Next**.
8. The **End-User License Agreement** screen appears. Read the terms, indicate acceptance, then click **Next**.
9. The **Destination Folder** selection screen appears. Install BootP to the default folder or click **Browse** to choose another location. Click **Next**.

   The default location for installation is:

C:\Program Files\Agilent\BootPService\

10 Click **Install** to begin installation.

11 Files load; when finished, the **BootP Settings** screen appears.

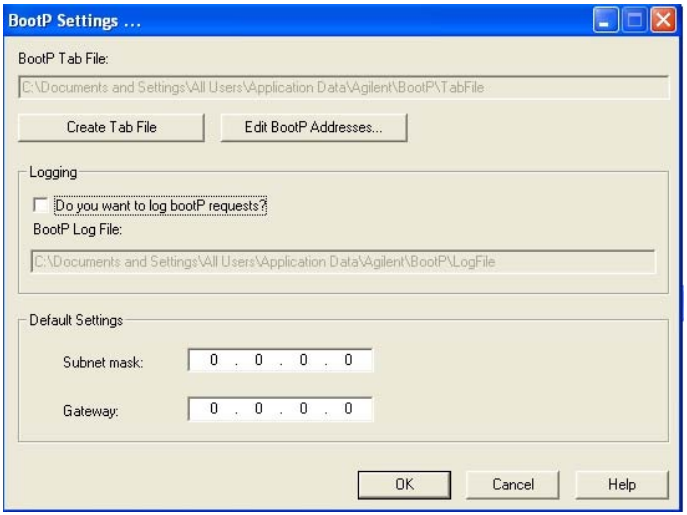

Figure 20 BootP Settings screen

12 In the **Default Settings** part of the screen, if known, you can enter the subnet mask and gateway.

Defaults can be used:

- The default subnet mask is 255.255.255.0.
- The default gateway is 10.1.1.101.

13 On the **BootP Settings** screen, click **OK**. The **Agilent BootP Service Setup** screen indicates completion.

14 Click **Finish** to exit the **Agilent BootP Service Setup** screen.

15 Remove the DVD from the drive.

This completes installation.

16 Start the BootP service. On the Windows® desktop, select **Start > Control Panel > Services**. Select the **Agilent BootP Service** and click **Start**.

Two Methods to Determine the MAC Address

Enabling logging to discover the MAC address using BootP

If you want to see the MAC address, select the **Do you want to log BootP requests?** check box.

1 Open BootP Settings from **Start > All Programs > Agilent BootP Service > EditBootPSettings**.

2 In **BootP Settings...** check **Do you want to log BootP requests?** to enable logging.

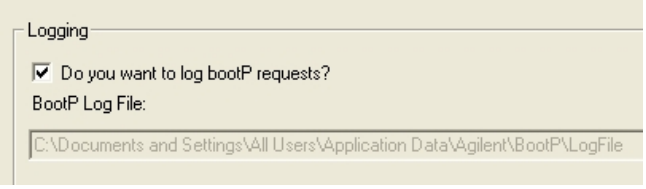

Figure 21 Enable BootP logging

The log file is located in

C:\Documents and Settings\All Users\Application Data\Agilent\BootP\LogFile

It contains a MAC address entry for each device that requests configuration information from BootP.

3 Click **OK** to save the values or **Cancel** to discard them. The editing ends.

4 After each modification of the BootP settings (i.e. **EditBootPSettings**) a stop or start of the BootP service is required for the BootP service to accept changes. See "Stopping the Agilent BootP Service" on page 75 or "Restarting the Agilent BootP Service" on page 76.

5 Uncheck the **Do you want to log BootP requests?** box after configuring instruments; otherwise, the log file will quickly fill up disk space.

Determining the MAC address directly from the LAN Interface card label

1 Turn off the instrument.

2 Read the MAC address from the label and record it.

The MAC address is printed on a label on the rear of the module. It is the number below the barcode and after the colon (:) and usually begins with the letters AD.

See Figure 13 on page 58 and Figure 14 on page 59.

3 Turn on the instrument.

Assigning IP Addresses Using the Agilent BootP Service

The Agilent BootP Service assigns the Hardware MAC address of the instrument to an IP address.

Determining the MAC address of the instrument using BootP Service

1 Power cycle the Instrument.
2 After the instrument completes self-test, open the log file of the BootP Service using Notepad.
   - The default location for the logfile is C:\Documents and Settings\All Users\Application Data\Agilent\BootP\LogFile.
   - The logfile will not be updated if it is open.

   The contents will be similar to the following:

02/25/10 15:30:49 PM

Status: BootP Request received at outermost layer

Status: BootP Request received from hardware address: 0010835675AC

Error: Hardware address not found in BootPTAB: 0010835675AC

Status: BootP Request finished processing at outermost layer

3 Record the hardware (MAC) address (for example, 0010835675AC).
4 The Error means the MAC address has not been assigned an IP address and the Tab File does not have this entry. The MAC address is saved to the Tab File when an IP address is assigned.
5 Close the log file before turning on another instrument.
6 Uncheck the **Do you want to log BootP requests?** box after configuring instruments to avoid having the logfile use up excessive disk space.

Adding each instrument to the network using BootP

1 Follow **Start > All Programs > Agilent BootP Service** and select **Edit BootP Settings**. The BootP Settings screen appears.

2 Uncheck the **Do you want to log BootP requests?** once all instruments have been added.

The **Do you want to log BootP requests?** box must be unchecked when you have finished configuring instruments; otherwise, the log file will quickly fill up disk space.

3 Click **Edit BootP Addresses...** The **Edit BootP Addresses** screen appears.

4 Click **Add...** The **Add BootP Entry** screen appears.

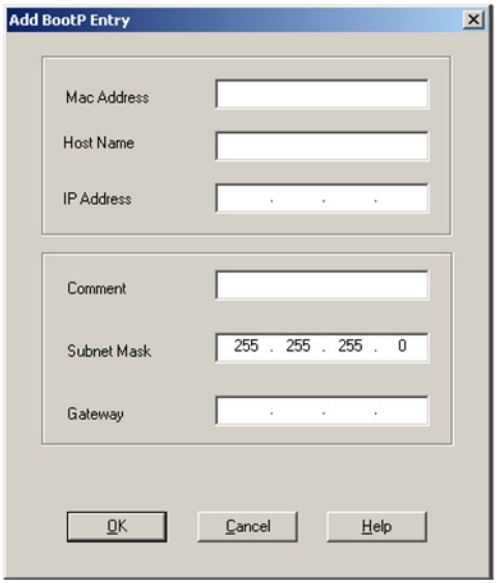

Figure 22 Enable BootP logging

5 Make these entries for the instrument:

- MAC address
- Host name, Enter a Hostname of your choice.

  The Host Name must begin with "alpha" characters (i.e. GC6890)
- IP address
- Comment (optional)

- Subnet mask
- Gateway address (optional)

The configuration information entered is saved in the Tab File.

6 Click **OK**.

7 Leave **Edit BootP Addresses** by pressing **Close**.

8 Exit **BootP Settings** by pressing **OK**.

9 After each modification of the BootP settings (i.e. EditBootPSettings) a stop or start of the BootP service is required for the BootP service to accept changes. See "Stopping the Agilent BootP Service" on page 75 or "Restarting the Agilent BootP Service" on page 76.

10 Power cycle the Instrument.

OR

If you changed the IP address, power cycle the instrument for the changes to take effect.

11 Use the PING utility to verify connectivity by opening a command window and typing:

Ping 10.1.1.101 for example.

The Tab File is located at

C:\Documents and Settings\All Users\Application Data\Agilent\BootP\TabFile

Changing the IP Address of an Instrument Using the Agilent BootP Service

Agilent BootP Service starts automatically when your PC reboots. To change Agilent BootP Service settings, you must stop the service, make the changes, and then restart the service.

Stopping the Agilent BootP Service

1 From the Windows control panel, select **Administrative Tools > Services**. The **Services** screen appears.

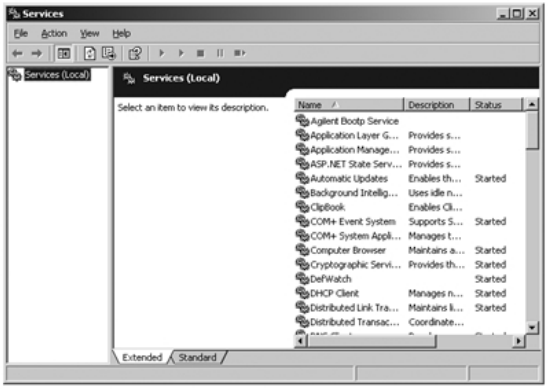

Figure 23 Windows Services screen

2 Right-click **Agilent BootP Service**.

3 Select **Stop**.

4 Close the **Services and Administrative Tools** screen.

Editing the IP address and other parameters in EditBootPSettings

1 Select **Start > All Programs > Agilent BootP Service** and select **Edit BootP Settings**. The **BootP Settings** screen appears.

2 When the **BootP Settings** screen is first opened, it shows the default settings from installation.

3 Press **Edit BootP Addresses...** to edit the Tab File.

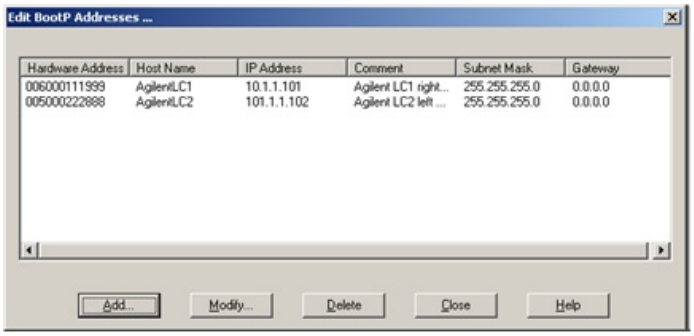

Figure 24 Edit BootP Adresses screen

4 In the **Edit BootP Addresses...** screen press **Add...** to create a new entry or select an existing line from the table and press **Modify...** or **Delete** to change the IP address, comment, subnet mask, for example, in the Tab File.

If you change the IP address, it will be necessary to power cycle the instrument for the changes to take effect.

5 Leave **Edit BootP Addresses...** by pressing **Close**.

6 Exit BootP Settings by pressing OK.

Restarting the Agilent BootP Service

1 In the Windows control panel, select **Administrative Tools > Services**. The **Services** screen appears, see Figure 23 on page 75.

2 Right-click **Agilent BootP Service** and select **Start**.

3 Close the **Services and Administrative Tools** screens.

Storing the settings permanently with Bootp (Nucleus)

If you want to change parameters of the module using the Bootp follow the instructions below.

1. Turn off the module.
2. Change the module's settings of the Configuration Switch to *"Bootp & Store"* mode, see Table 16 on page 63.
3. Start the Agilent Bootp Service and open its window.
4. If required, modify the parameters for the module according to your needs using the existing configuration.
5. Press **OK** to exit the Bootp Manager.
6. Now turn on the module and view the Bootp Server window. After some time the Agilent Bootp Service will display the request from the LAN interface. The parameters are now stored permanently in the non-volatile memory of the module.
7. Close the Agilent Bootp Service and turn off the module.
8. Change the settings of the module's Configuration Switch to *"Using Stored"* mode, see Table 16 on page 63.
9. Power cycle the module. The module can be accessed now via LAN without the Agilent Bootp Service, refer to "Agilent ChemStation Setup" on page 85.

Manual Configuration (Nucleus)

Manual configuration only alters the set of parameters stored in the non-volatile memory of the module. It never affects the currently active parameters. Therefore, manual configuration can be done at any time. A power cycle is mandatory to make the stored parameters become the active parameters, given that the initialization mode selection switches are allowing it.

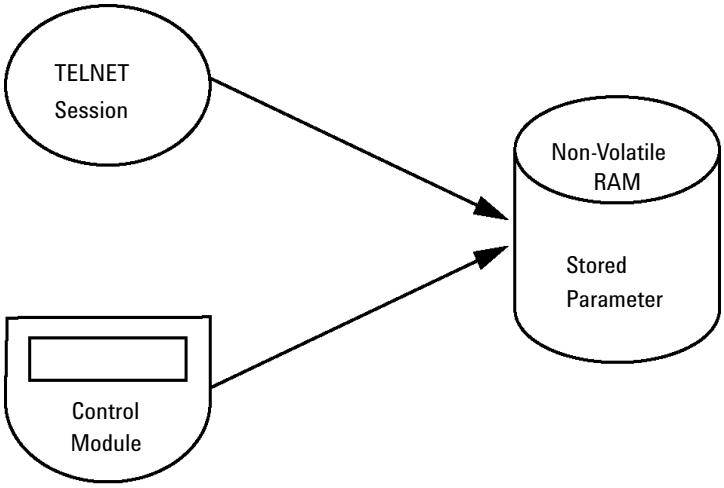

Figure 25 Manual Configuration (Principle)

With Telnet

Whenever a TCP/IP connection to the module is possible (TCP/IP parameters set by any method), the parameters may be altered by opening a Telnet session.

1 Open the system (DOS) prompt window by clicking on Windows **START** button and select **"Run..."**. Type "cmd" and press OK.

2 Type the following at the system (DOS) prompt:

- **c:\>telnet <IP address>** or
- **c:\>telnet <host name>**

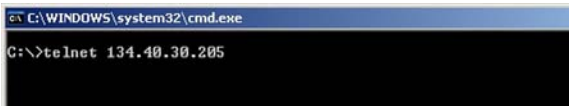

Figure 26 Telnet - Starting a session

where <IP address> may be the assigned address from a Bootp cycle, a configuration session with the Handheld Controller, or the default IP address (see "Configuration Switches (Nucleus)" on page 61).

When the connection was established successfully, the module responds with the following:

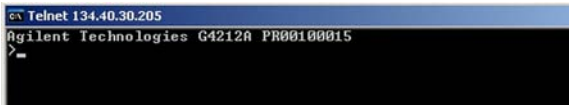

Figure 27 A connection to the module is made

3 Type
? and press enter to see the available commands.

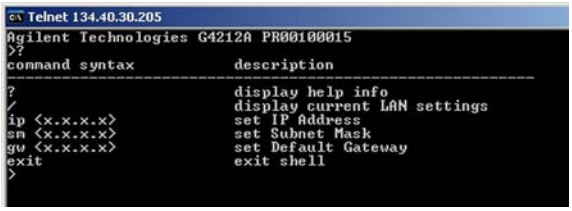

Figure 28 Telnet Commands

Table 19 Telnet Commands

Value	Description
?	displays syntax and descriptions of commands
/	displays current LAN settings
ip <x.x.x.x>	sets new ip address
sm <x.x.x.x>	sets new subnet mask

Table 19 Telnet Commands

Value	Description
gw <x.x.x.x>	sets new default gateway
exit	exits shell and saves all changes

4 To change a parameter follows the style:

- parameter value, for example:
  `ip 134.40.28.56`

Then press [Enter], where parameter refers to the configuration parameter you are defining, and value refers to the definitions you are assigning to that parameter. Each parameter entry is followed by a carriage return.

5 Use the “/” and press Enter to list the current settings.

Figure 29 Telnet - Current settings in "Using Stored" mode

information about the LAN interface
MAC address, initialization mode
Initialization mode is Using Stored
active TCP/IP settings

TCP/IP status - here ready
connected to PC with controller software (e.g. Agilent ChemStation), here not connected

6 Change the IP address (in this example 192.168.254.12) and type “/” to list current settings.

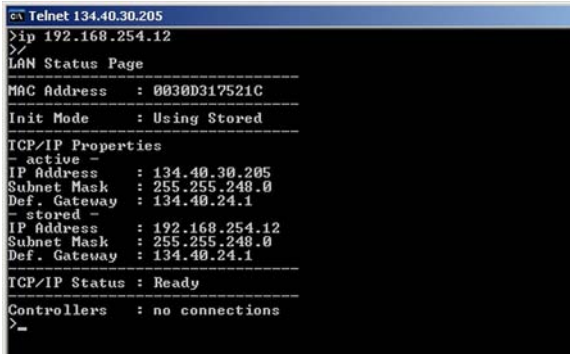

change of IP setting to
Initialization mode is Using Stored

active TCP/IP settings

stored TCP/IP settings in non-volatile memory

connected to PC with controller software (e.g. Agilent ChemStation), here not connected

Figure 30 Telnet - Change IP settings

7 When you have finished typing the configuration parameters, type **`exit`** and press **Enter** to exit with storing parameters.

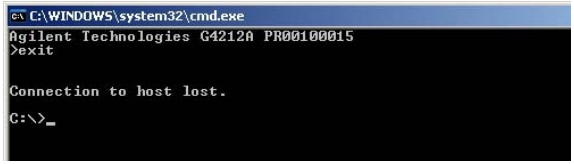

Figure 31 Closing the Telnet Session

NOTE If the Initialization Mode Switch is changed now to “Using Stored” mode, the instrument will take the stored settings when the module is re-booted. In the example above it would be 192.168.254.12.

With the Instant Pilot (G4208A)

To configure the TCP/IP parameters before connecting the module to the network, the Instant Pilot (G4208A) can be used.

1 From the Welcome screen press the **More** button.

2 Select **Configure.**

3 Press the **DAD** (MWD) button.

4 Scroll down to the LAN settings.

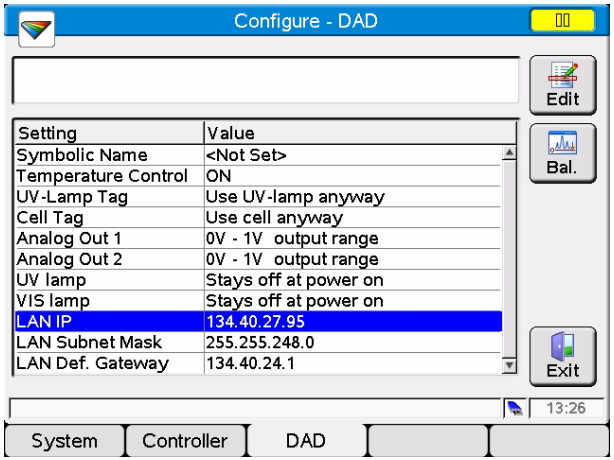

Figure 32 Instant Pilot - LAN Configuration

5 Press the **Edit** button (only visible if not in Edit mode), perform the required changes and press the **Done** button.

6 Leave the screen by clicking **Exit**.

PC and Agilent ChemStation Setup

PC Setup for Local Configuration

This procedure describes the change of the TCP/IP settings on your PC to match the module's default parameters in a local configuration (see Table 17 on page 65).

1 Open the Local Area Connection Properties and select **Internet Protocol (TCP/IP)**. Then click on **Properties**.

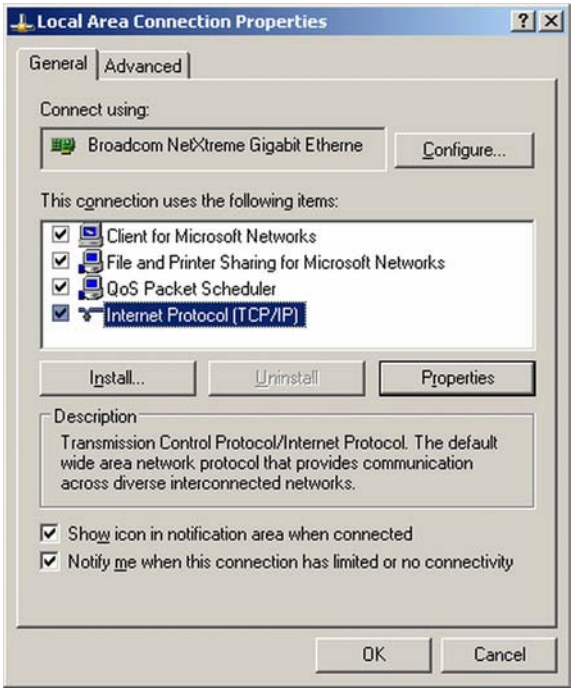

2 You may enter here the fixed IP address of the module or use the **Alternative Configuration**.

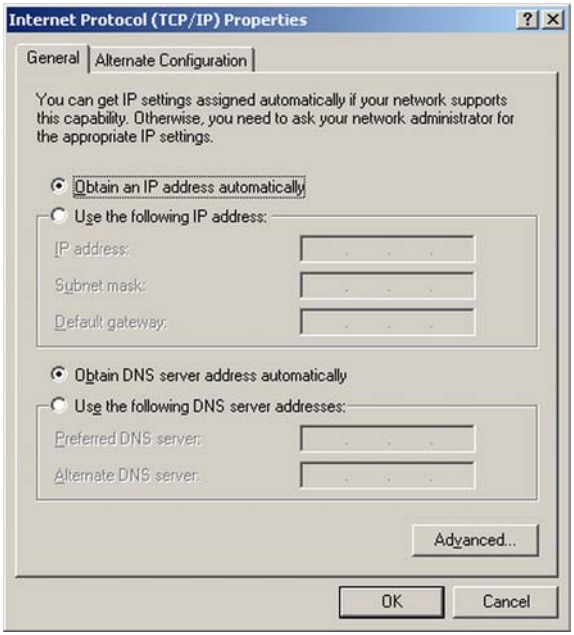

3 We will use the direct LAN access via Cross-over LAN cable with the module's IP address.

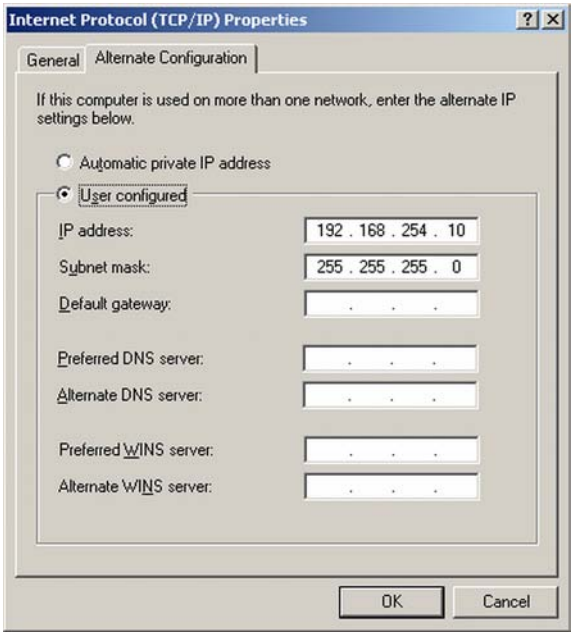

4 Click on **OK** to save the configuration.

Agilent ChemStation Setup

This procedure describes the Agilent ChemStation B.04.02 setup for the 1290 Infinity system using the 1290 Infinity DAD (G4212A) as the interfacing module.

1 Open the ChemStation Configuration Editor.

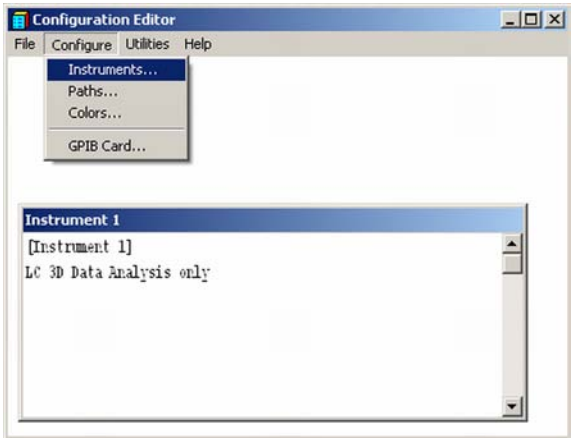

2 Select the menu **Configure > Instruments**.

3 Select **Modular 3D LC System**.

4 Give the Instrument a name.

5 Click on **OK**.

6 Select **LC System Access — Access Point** and click on **Add**.

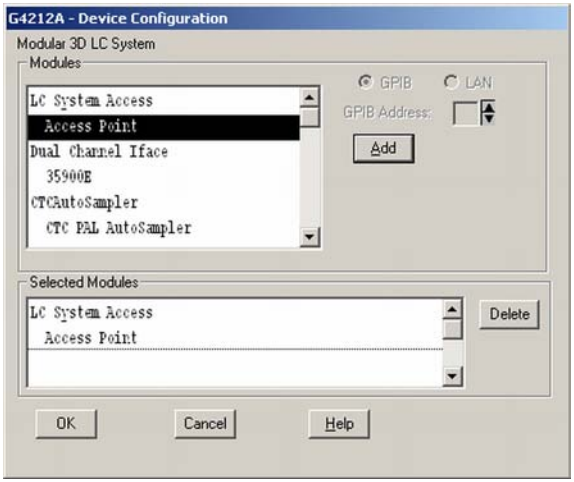

7 Click on **OK**.

The Configuration Editor shows now the new instrument.

8 If required, change under **Configure – Path** the folder locations.

9 Save the current configuration via **File – Save**.

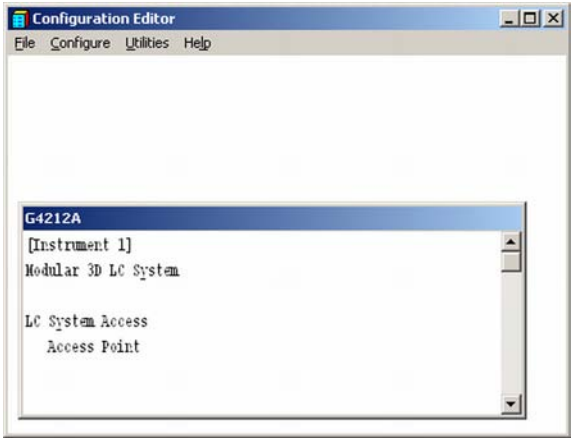

10 Exit the Configuration Editor.

11 Start the Agilent ChemStation.

During first startup or when the system configuration has changed, a notification shows up.

12 The left column shows the modules that could be configured. You may select the module manually from the list. We use the Auto Configuration mode. Click on **Yes**.

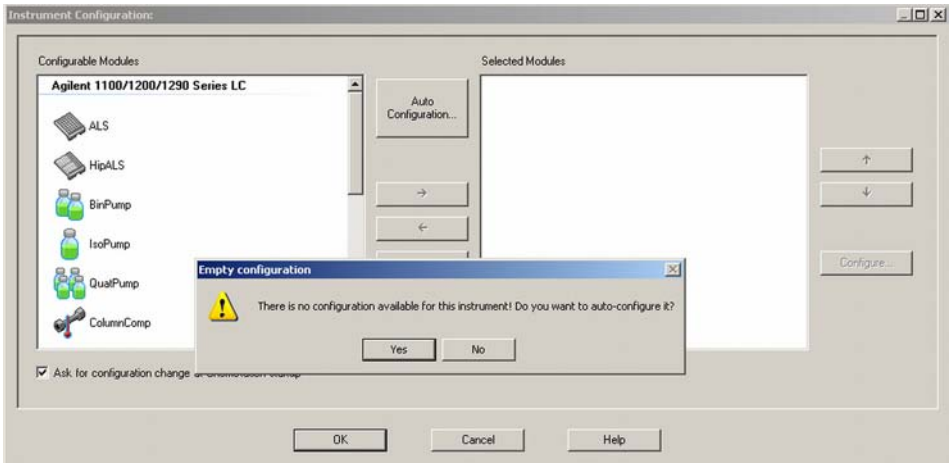

13 Click on **Auto Configuration**.

14 Use **Agilent 1100/1200 Series LC** and click on **Auto Configuration**.

15 Enter the IP address or the Hostname of the module with the LAN-access.

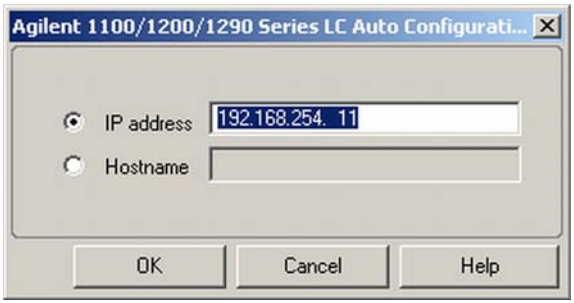

16 Click on **OK**.

The selected module is shown now in the right window (with serial number).

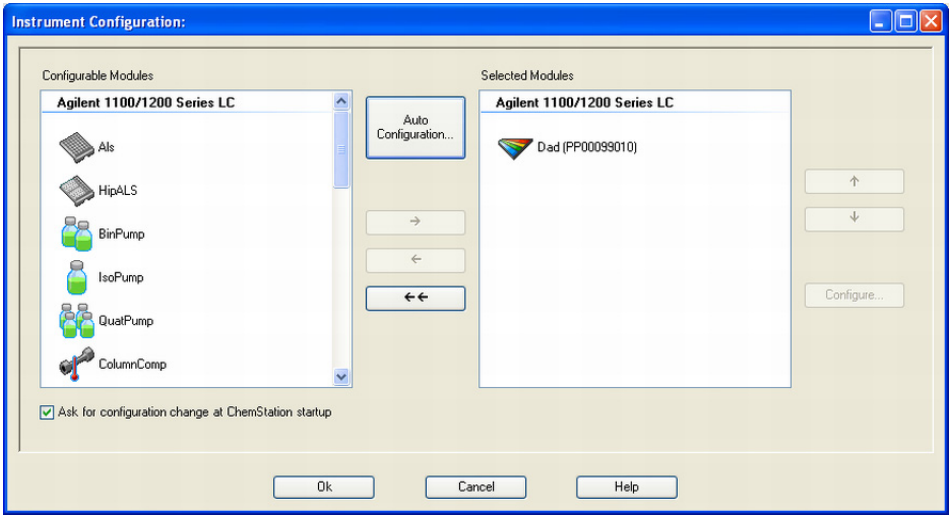

17 Click on **OK** to continue the ChemStation loading.

You may see the details of the module by **selecting the module** and clicking on **Configure**.

After successful load of the ChemStation, you should see the module as active item in the graphical user interface (GUI).

5
Using the Pump

This chapter explains the operational parameters of the Binary Pump SL.

Preparing the Binary Pump

For best performance of the pump:

- Place solvent cabinet with the solvent bottles always on top (or at a higher level) of the Binary Pump.
- When using the Binary Pump without vacuum degassing unit, shortly degas your solvents (for example, water vacuum pump for 15 – 30 s in an appropriate vessel) before using them in the pump. If possible apply solvent conditions that will decrease the gas solubility over time (for example, warming up the solvents).
- The use of avacuum degassing unit is mandatory for flow rates below 0.5 ml/min and for configurations without Jet Weaver.
- When using the Binary Pump with vacuum degassing unit, flush the degassing unit with at least 5 ml per channel before operating the Binary Pump, especially when the pumping system had been turned off for a certain length of time (for example, overnight) and volatile solvent mixtures are used in the channels.
- Prevent blocking of solvent inlet filters (never use the pump without solvent inlet filters). Growth of algae should be avoided.
- Check pump outlet filters and column frit in regular time intervals. A blocked pump outlet filter can be identified by black, yellow or greenish layers on its surface.
- Whenever possible use a minimum flow rate of 5 µl/min per solvent channel to avoid crossflow of solvent into the unused pump channel.
- When using buffer solutions, flush the system with water before switching it off. The seal wash option should be used when buffer solutions with concentrations of 0.1 M or higher are being pumped for long periods of time.
- Never leave an unused pump with water in a channel for an extended period of time (2-3 days). Always flush with organic or add 10 % isopropanol to water.
- Check the pump pistons for scratches, grooves and dents when changing the piston seals. Damaged pistons cause micro leaks and will decrease the lifetime of the seals.

- Solvent Information - Observe recommendations on the use of solvents.
  - Always filter solvents through 0.4 µm filters. Small particles can permanently block the capillaries and valves. Avoid the use of the following steel-corrosive solvents:
  - Solutions of alkali halides and their respective acids (for example, lithium iodide, potassium chloride, and so on).
  - High concentrations of inorganic acids like sulfuric and nitric acid, especially at higher temperatures (replace, if your chromatography method allows, by phosphoric acid or phosphate buffer which are less corrosive to stainless steel).
  - Halogenated solvents or mixtures which form radicals and/or acids, for example:

    $2CHCl_3 + O_2 \longrightarrow 2COCl_2 + 2HCl$
  - This reaction, in which stainless steel probably acts as a catalyst, occurs quickly with dried chloroform if the drying process removed the stabilizing alcohol.
  - Chromatographic grade ethers, which can contain peroxides (for example, THF, dioxane, di-isopropylether). Such ethers should be filtered through dry aluminium oxide which adsorbs the peroxides.
  - Solvents containing strong complexing agents (e.g. EDTA).
  - Mixtures of carbon tetrachloride with 2-propanol or THF dissolve stainless steel.

Setting up the Pump with Agilent ChemStation

The setup of the Binary pump is shown with the Agilent ChemStation B.04.02. Depending on the controller (e.g. Agilent Instant Pilot, EZChrom Elite) the screens look different. For the Instant Pilot refer to "Main Screens of the Pump with Agilent Instant Pilot (G4208A)" on page 109.

NOTE This section describes the pump settings only. For information on the Agilent ChemStation or other 1290 Infinity modules refer to the corresponding documentation or the 1290 Infinity System Manual.

After successful load of the ChemStation, you should see the module as an active item in the graphical user interface (GUI).

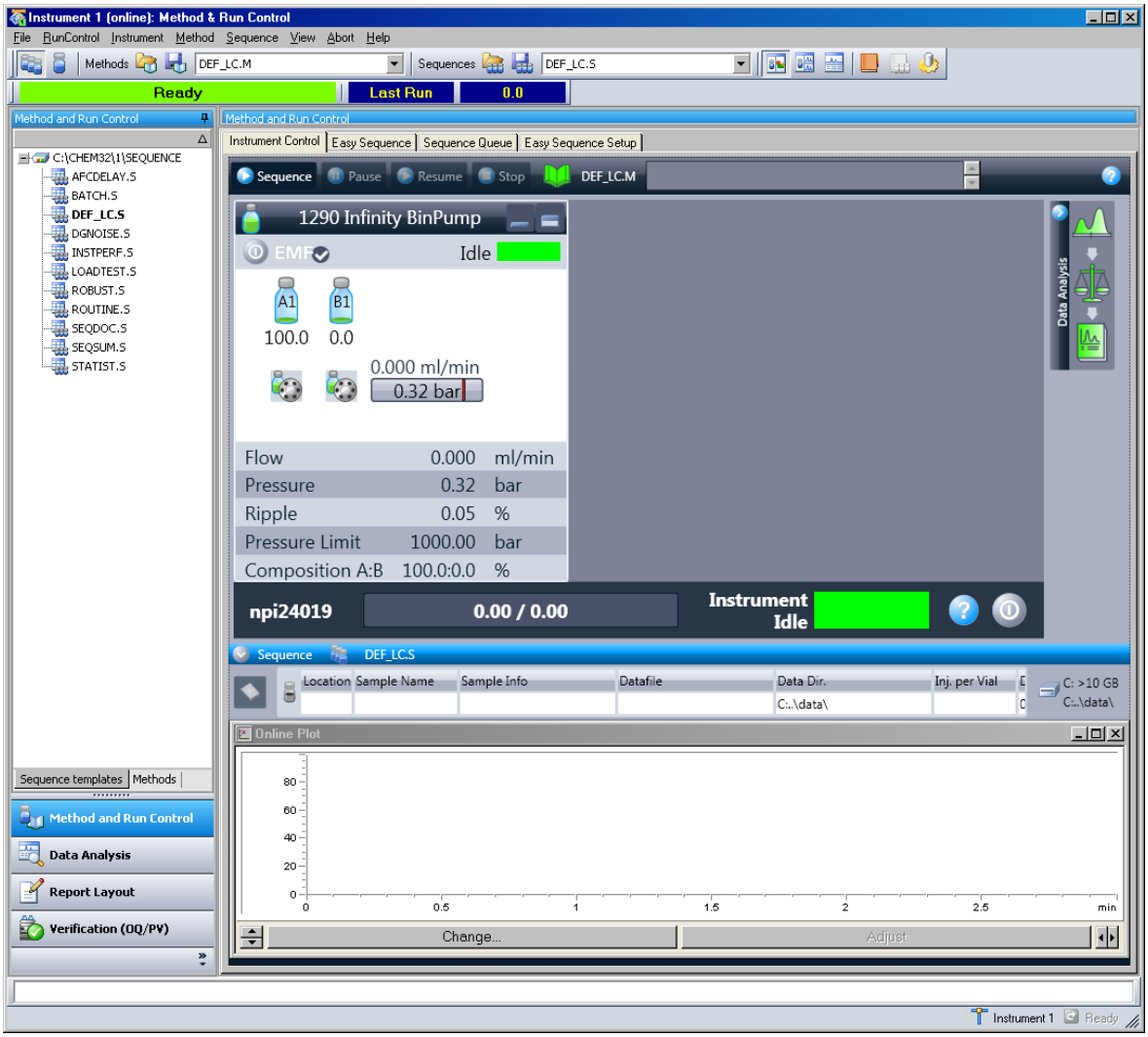

Figure 33 ChemStation Method & Run Control

The Pump User Interface

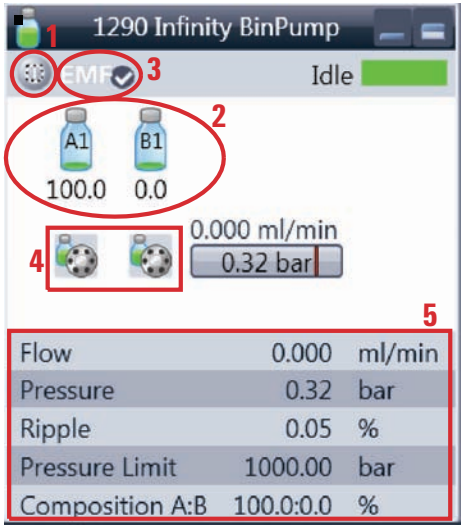

Within the Pump user interface, there are *active areas*. If you move the mouse cursor across the icons (bottles, **EMF** button), the cursor will change and you may click on the icon to

- Turn on/off the pump (1)
- Set Solvent bottle fillings (2)
- Turn on/off the EMF (Early Maintenance Feature) (3)
- Solvent selection (4)

Actual instrument Information (5)

- **Flow**
- **Pressure**
- **Ripple**
- **Pressure Limit**
- **Composition A:B**

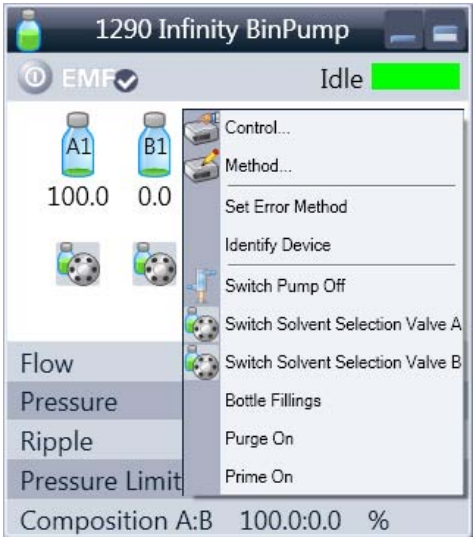

A right-click into the *active area* will open a menu to

- Show the **Control** user interface (special module settings)
- Show the **Method** user interface (same as via menu **Instrument > Setup G4220A/B**)
- **Set Error Method**
- **Identify Device**
- **Switch Pump On/Off** (same as click on pump on / off button
- **Switch Solvent Selection Valve** (channel A and B)
- Open **Bottle Fillings** dialog (same as click on the bottles icon)
- **Purge On/Off**
- **Prime On/Off**

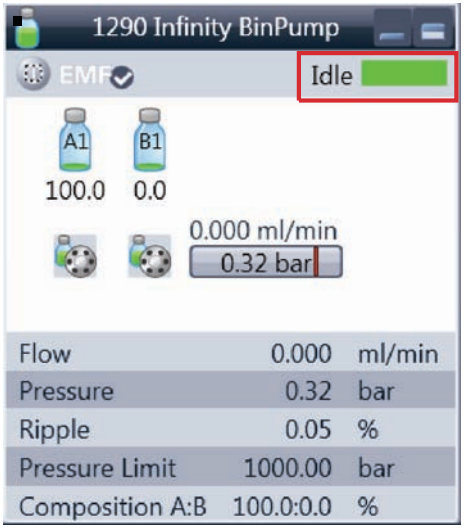

Module Status shows Run / Ready / Error state and "Not Ready text" or "Error text"

- **Error** (Red)
- **Not ready** (yellow)
- **Ready** (green)
- **Pre run**, **Post run** (purple)
- **Run** (blue)
- **Idle** (green)
- **Offline** (dark gray)
- **Standby** (light gray)

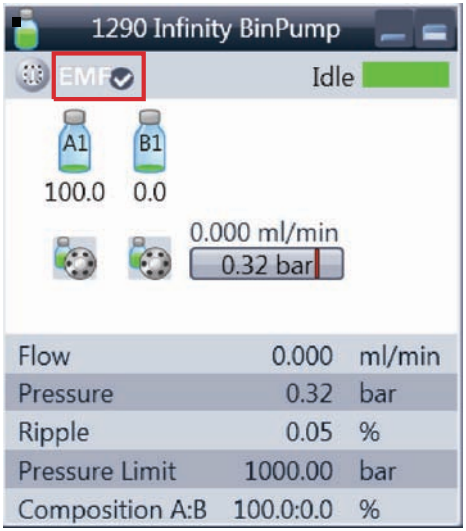

EMF Status shows Run / Ready / Error state and "Not Ready text" or "Error text".

- Offline (gray)
- Ok. No Maintenance required (green)
- EMF warning. Maintenance might be required (yellow)
- EMF warning. Maintenance required (red)

Control Settings

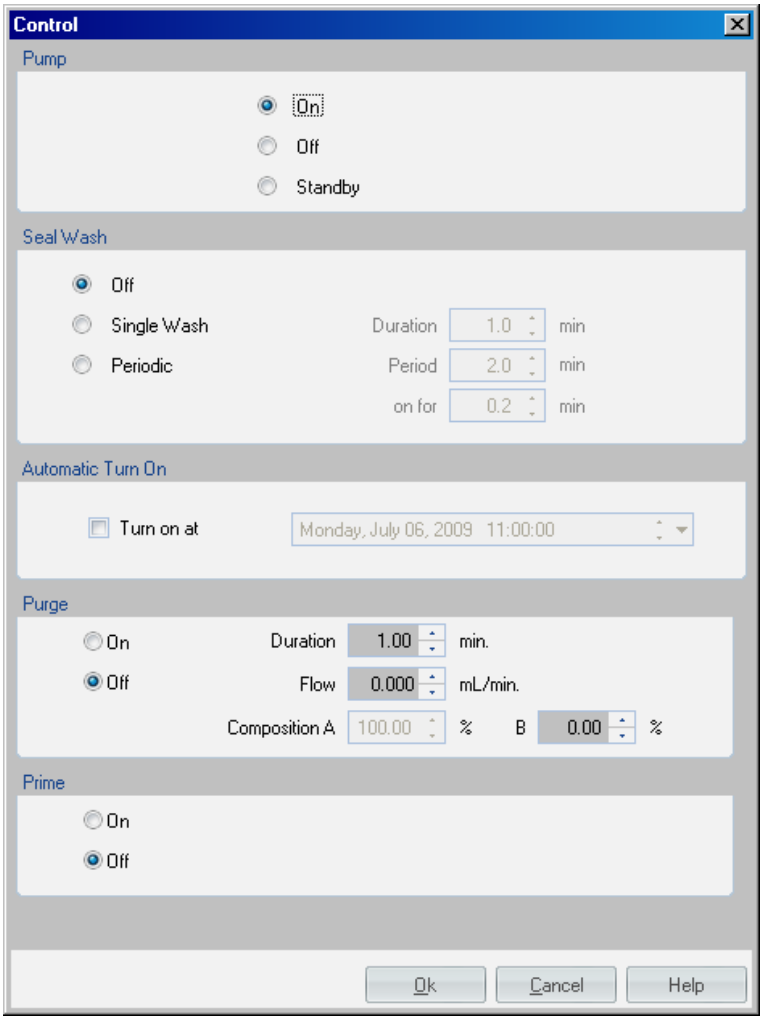

Figure 34 Control settings dialog

Pump

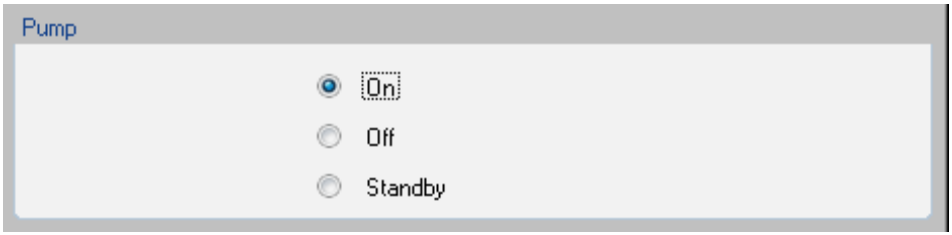

Pump can be turned ON/OFF or in standby.

Seal Wash

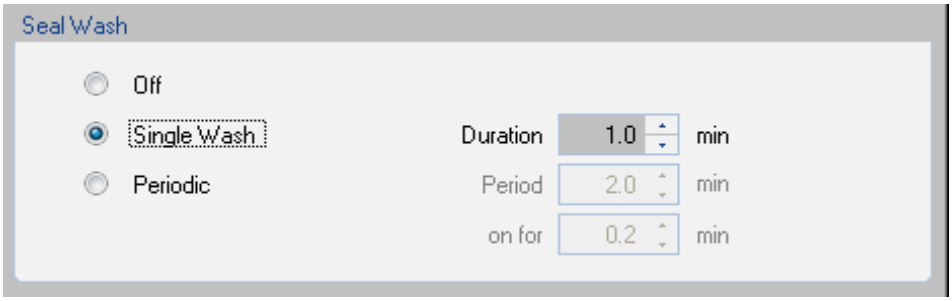

The seal wash can be set up to be run once or periodically. For a single wash, the duration has to be set. For periodic washing, the interval and the duration of each wash have to be defined. If seal wash is installed, it is recommended to use it in order to increase the primary seal lifetime.

Automatic Turn On

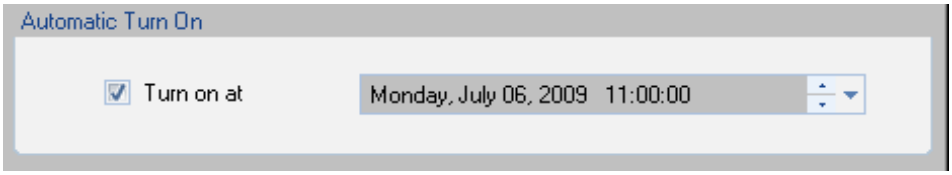

Module can be turned on at a specified date/time. This feature can only be used if the module power switch is turned on.

Purge

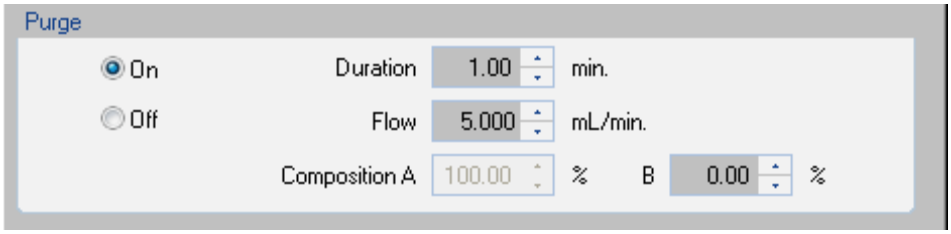

Setup and activation of Purge parameters. The automatic purge valve can be used for purging the system. The process has been automated for ease of use. Purge flow, time and composition during purge have to be defined. During purging the maximum flow rate is 10 ml/min, but never more than 5 ml/min for a single channel. As soon as the duration time of the purge ends, the module automatically switches to analytical conditions again.

Prime

The Prime function is helpful if air has entered the pump heads. The module draws solvent, at high speed with all four pump drives simultaneously, and dispenses it against the waste position of the automatic purge valve. This is done 20 times, before the process comes to an end.

Method Parameter Settings

These settings are available via the menu **Instrument > Setup Instrument Method** or via right click on the *active area*.

NOTE The signal window in the lower part is not shown when opening the parameter settings via right mouse on the Pump user interface.

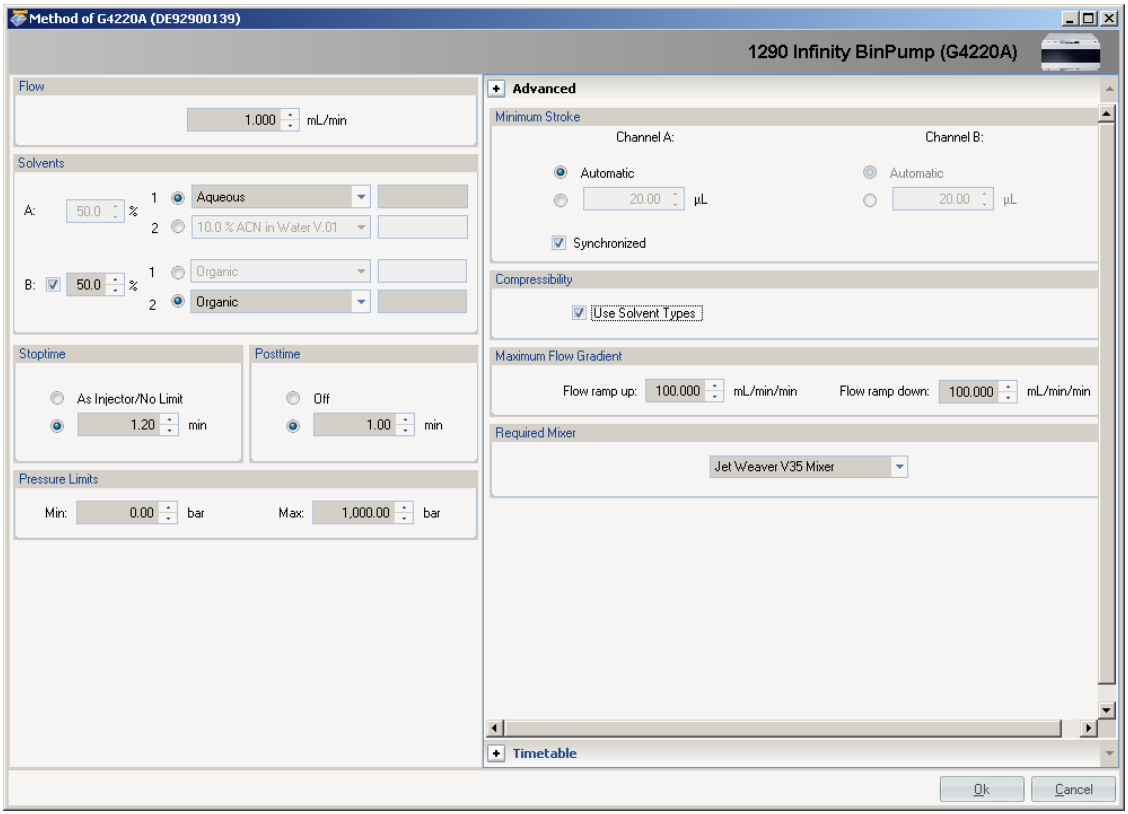

Figure 35 Method Parameter Settings

Flow

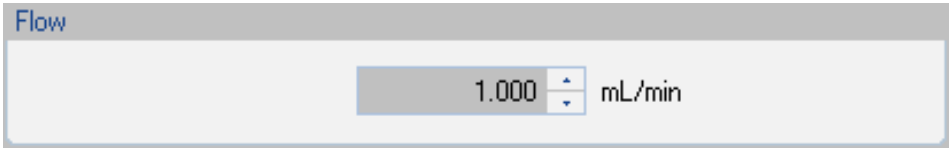

The settable flow range is from 0.001 – 5.0 ml/min, but the recommended flow range of the pump is limited to 0.05 – 5.0 ml/min.

Stop Time / Post Time

The pump stop time is the master for the system stop time. If no limit is given, a method will have to be stopped manually. Post time is a time added at the end of the run time at initial conditions, used for equilibrating the system.

Pressure Limits

A minimum and maximum pressure may be set. A minimum pressure is useful, for example, to prevent damage on columns if system is running out of solvents. The maximum pressure setting should be set in order to avoid over pressuring the column.

Solvents

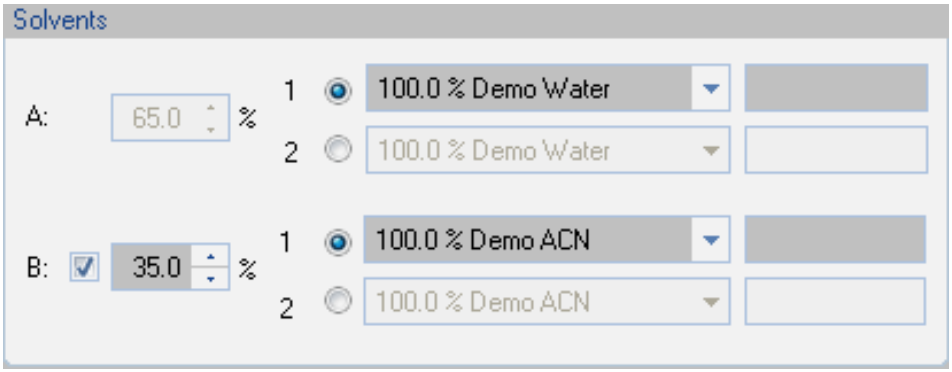

It is possible to select between a wide variety of different solvents and mixtures of these. Setting the correct solvent is required to get optimum flow and composition accuracy.

Advanced Method Parameter Settings

These settings are available via the menu **Instrument > Setup Instrument Method** or via right click on the *active area*.

Minimum Stroke

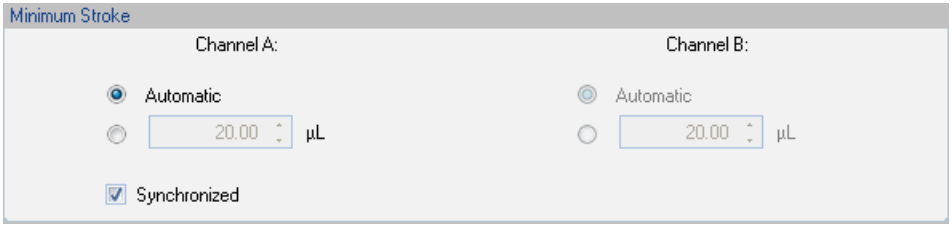

The Stroke Volume is used for optimizing between performance of the module and seal life time. For performance a low Stroke Volume is beneficial, as it divide disturbances into smaller packages, but a larger volume is extending the life time of the pump seals. If Automatic Stroke Volume is activated, the pump tries to achieve an optimized Stroke Volume for the Jet Weaver geometry. In order to further reduce disturbances in composition, you should select the **Synchronized** option. The pump then fits the Stroke Volume of the fast running pump head, to fall into the pattern of the slower running pump head. This is done to avoid floating disturbances affecting instrument performance.

Compressibility

By selecting **Use solvent types**, the pump delivers the optimal flow and composition accuracy. This is recommended for most applications.
Fixed values for compressibility can be entered to achieve method transferability to other HPLC systems.
No compensation is not compensating for any compressibility effects at all. This is useful if there is air in the system, and a purge and/or prime did not totally remove it. Running a pump without compensation against pressure will restore the system into air free conditions faster. This mode is not recommended for analytical use.

Maximum Flow Gradient

The maximum Flow gradients may be adjusted to prevent shock effects destroying columns or other sensitive parts of the system.

Required Mixer

To ensure a method is always run with the same specified Jet Weaver mixer, it can be added as method parameter. This will only allow the method to start if the correct Jet Weaver volume is installed, by checking the Tag information prior to running. Be aware that a sequence that contains methods requiring different Jet Weavers will not be able to complete.

Time Table Settings

These settings are available via the menu **Instrument > Setup Instrument Method** or via right click on the *active area*.

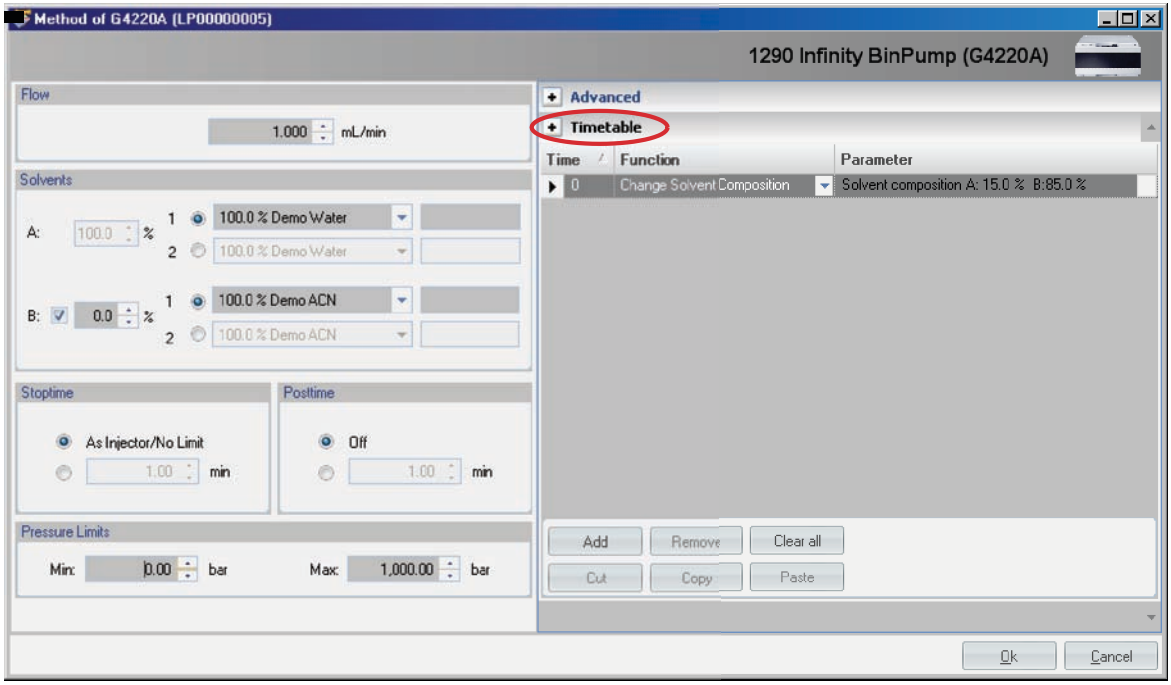

Time Table Entries

Following parameters can be changed as a function of time:

- Flow
- Solvent Composition
- Max. Pressure limit

Instrument Configuration

These settings are available via the menu **Instrument > Instrument Configuration**.

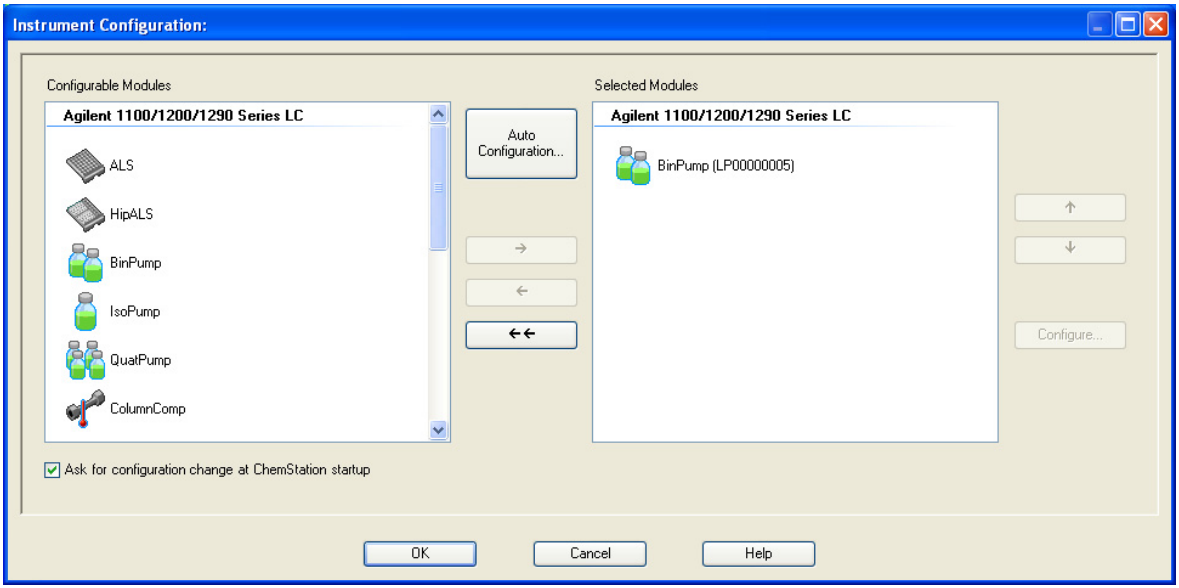

Figure 36 Instrument Configuration Screen

Via the **Instrument Configuration** screen additional modules can be added to a system.

Auto Configuration

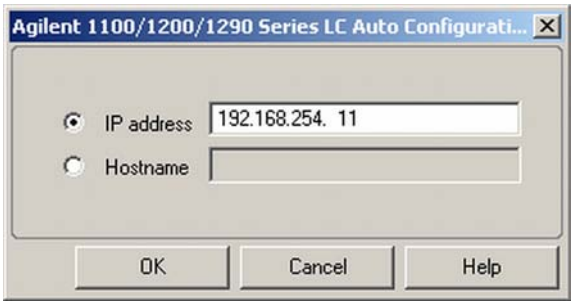

Use the **Auto Configuration** to define the LAN communication between the Agilent ChemStation and the host module (usually the Agilent detector).
Changing parameters become active after reboot of the ChemStation.

Instrument Configuration

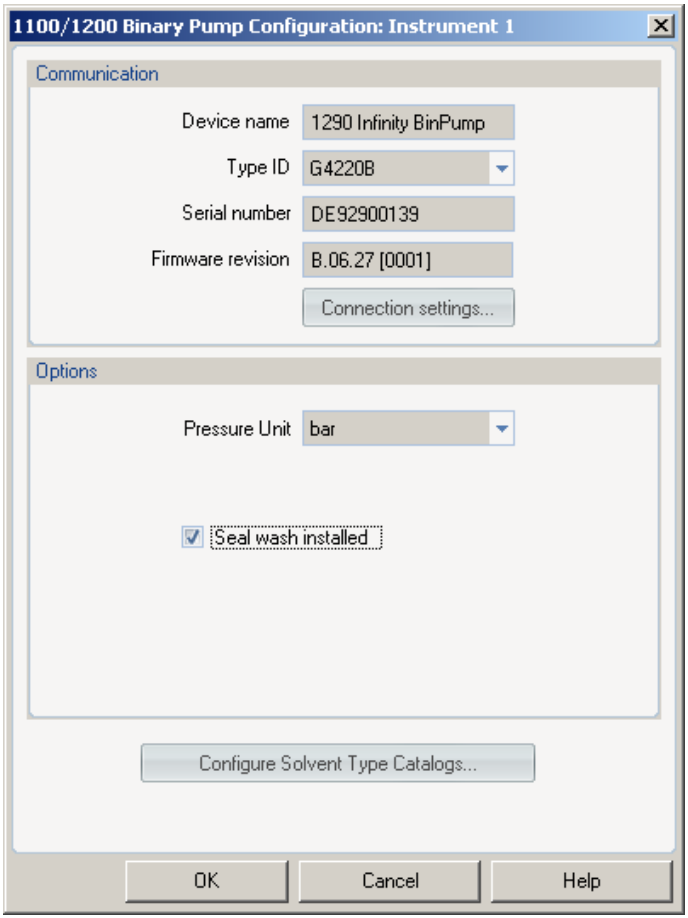

Device name: Based on the module.
Type ID: Based on the module (product number). Some modules may allow changing the type based on hardware/firmware. This results in a change of features and functions.
Serial number: Based on the module.
Firmware revision: Based on the module.

Options: Lists installed options.
- Pressure Units
- Seal wash installed

Priming the Pump

When the solvents have been exchanged or the pumping system has been turned off for a certain time (for example, overnight) oxygen will re-diffuse into the solvent channel between the solvent reservoir, vacuum degassing unit (when available in the system) and the pump. Solvents containing volatile ingredients will slightly lose these. Therefore priming of the pumping system is required before starting an application.

1 Initiate a purge in the controlling SW with a Purge flow set to 3–5 ml/min per channel.

2 Flush all tubes with at least 30 ml of solvent.

Table 20 Choice of Priming Solvents for Different Purposes

Activity	Solvent	Comments
After an installation	Isopropanol	Best solvent to flush air out of the system
When switching between reverse phase and normal phase (both times)	Isopropanol	Isopropanol is miscible with both normal phase and reverse phase solvents.
After an installation	Ethanol or Methanol	Alternative to Isopropanol (second choice) if no Isopropanol is available
To clean the system when using buffers	Bidistilled water	Best solvent to re-dissolve buffer cristals
After a solvent change	Bidistilled water	Best solvent to re-dissolve buffer cristals
Before turning off system for an extended period of time	Organic or 10 % IPA in water	

NOTE The pump should never be used for priming empty tubings (never let the pump run dry). Use a syringe to draw enough solvent for completely filling the tubings to the pump inlet before continuing to prime with the pump.

If the system has been run dry or air has diffused into the pump it might require additional steps to get rid of the air again. Following the below procedure will give the best and fastest results.

1. Change solvent to isopropanol on both channels.
2. Turn on the Prime function.
3. Purge the system with 10 ml, composition 50/50 and for 10 min.
4. Attach a column suitable for isopropanol and set the Max. pressure limit to the limit of the column.
5. Run the system at composition 50/50 and a flow rate that gives a pressure close to the limit of the column.
6. Observe the pressure fluctuations. The system is air free as soon as the pressure is stable.
7. Change solvents and column according to the analytical conditions and purge the system to change solvents.

Main Screens of the Pump with Agilent Instant Pilot (G4208A)

The main screens for the use of the detector are shown below.

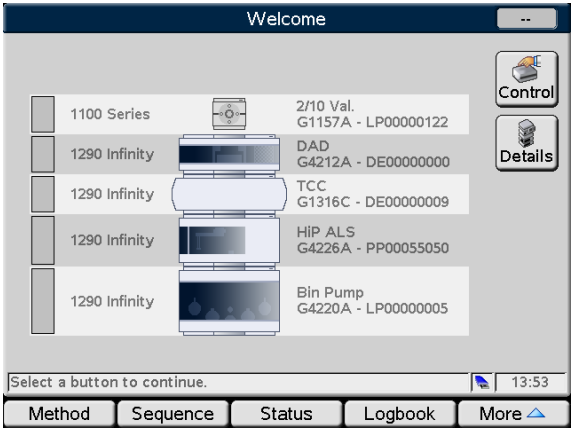

The **Control** screen allows

- System: On/Off
- System: Get Ready
- System: Clear Errors

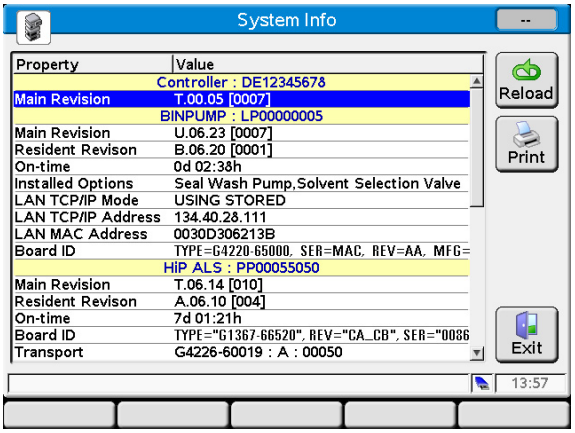

The **System Info** screen lists details of the pump

- Firmware revision
- On-time
- LAN settings
- Main Board information

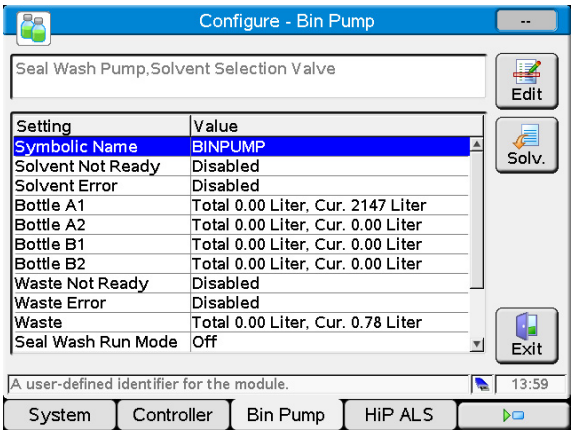

The **Configuration** screen allows to configure

- Symbolic name of module
- Bottle fillings
- Waste bottle
- Sealwash
- LAN settings

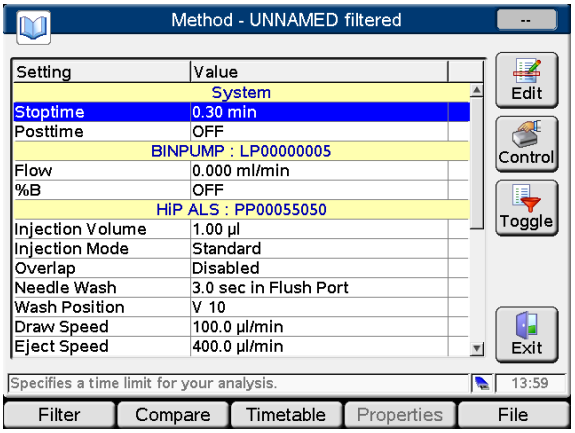

The **Method** screen lists all method parameters of the pump. These can be edited.

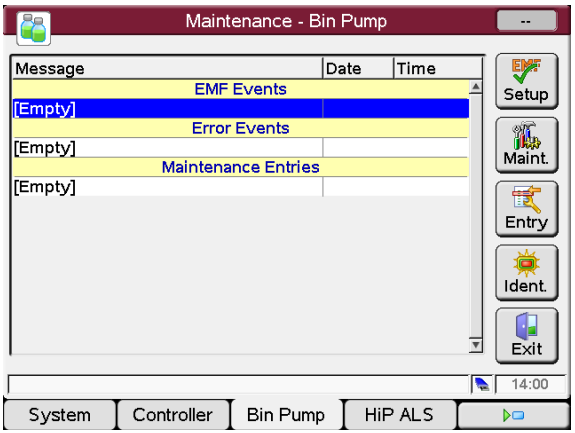

The **Maintenance** screen allows

- EMF setup
- logging of maintenance activities
- module identification (blinking LED)

Firmware Updates can be done via the System Maintenance screen.

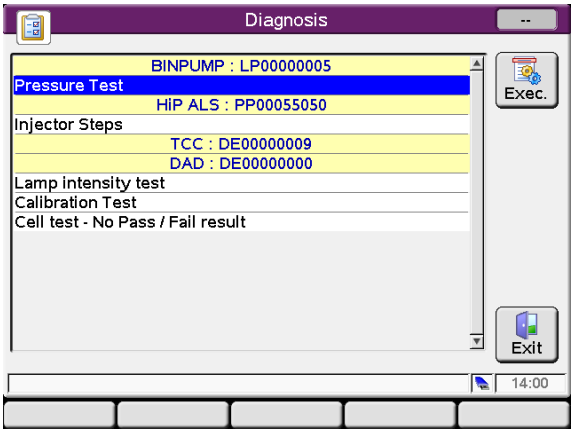

The **Diagnose** screen provides access to module specific tests.

- **Pressure test**

6
How to Optimize the Performance of Your Module

This chapter gives hints on how to optimize the performance or use additional devices.

Delay Volume and Extra-Column Volume

The *delay volume* is defined as the system volume between the point of mixing in the pump and the top of the column.

The *extra-column volume* is defined as the volume between the injection point and the detection point, excluding the volume in the column.

Delay Volume

In gradient separations, this volume causes a delay between the mixture changing in the pump and that change reaching the column. The delay depends on the flow rate and the delay volume of the system. In effect, this means that in every HPLC system there is an additional isocratic segment in the gradient profile at the start of every run. Usually the gradient profile is reported in terms of the mixture settings at the pump and the delay volume is not quoted even though this will have an effect on the chromatography. This effect becomes more significant at low flow rates and small column volumes and can have a large impact on the transferability of gradient methods. It is important, therefore, for fast gradient separations to have small delay volumes, especially with narrow bore columns (e.g., 2.1 mm i.d.) as often used with mass spectrometric detection.

The delay volume in a system includes the volume in the pump from the point of mixing, connections between pump and autosampler, volume of the flow path through the autosampler and connections between autosampler and column.

How to Configure the Optimum Delay Volume

For pump operation it is recommended to set the correct solvent in the pump setup screen. Even though the intelligent control will automatically tune the pressure ripple to a minimum the solvent compressibility can have an effect on maintaining absolutely correct flow rate at high pressure. This ensures that the correct compressibility values are always applied for the mobile phases used. Calibration curves are available for most common solvents.

The physical delay volume of the pump is primarily dependent on the use of the Jet Weaver mixer. For UV detection the Jet Weaver should always be used but for mass spectrometric detection the user can decide to bypass the Jet Weaver removing 35 µl from the delay volume. This only makes sense for ultra-fast gradient operation (less than 0.5 min) or for use with very small volume columns. If the Jet Weaver is bypassed the connection tubing to the autosampler is routed directly from the purge valve. Ensure that the Jet Weaver has been flushed with solvent containing no buffers or other additives before disconnecting it.

Sometimes it may be advisable to increase the delay volume in the pump. Specifically this can be the case when UV detection is employed and a strongly UV-absorbing compound has been added to the mobile phase. This can have the effect of emphasizing any pump noise and the most common example is the use of trifluoro acetic acid (TFA) in the analysis of proteins and peptides. The effect can be mitigated by increasing the mixer volume. The Jet Weaver mixer has two alternative volumes in the same unit. The switch from the lower volume, 35 µl, to the higher volume, 100 µl, is done by de-installing it, turning it around from front to back and re-installing it. The mixing volume (and hence delay volume) is increased by 65 µl and the baseline performance with additives like TFA will be improved. The configuration of the Jet Weaver is logged automatically by an attached RFID tag.

The procedure is illustrated in “Changing configuration or replacing the Jet Weaver” on page 171.

How to Achieve Higher Resolution

Increased resolution in a separation will improve the qualitative and quantitative data analysis, allow more peaks to be separated or offer further scope for speeding up the separation. This section considers how resolution can be increased by examining the following points:

- Optimize selectivity
- Smaller particle-size packing
- Longer Columns
- Shallower gradients, faster flow

Resolution between two peaks is described by the resolution equation:

$$Rs = \frac{1}{4}\sqrt{N}\,\frac{(\alpha - 1)}{\alpha}\,\frac{(k_2 + 1)}{k_2}$$

where

- R_s=resolution,
- N=plate count (measure of column efficiency),
- α=selectivity (between two peaks),
- k_2=retention factor of second peak (formerly called capacity factor).

The term that has the most significant effect on resolution is the selectivity, α, and practically varying this term involves changing the type of stationary phase (C18, C8, phenyl, nitrile etc.), the mobile phase and temperature to maximize the selectivity differences between the solutes to be separated. This is a substantial piece of work which is best done with an automated method development system which allows a wide range of conditions on different columns and mobile phases to be assessed in an ordered scouting protocol. This section considers how to get higher resolution with any chosen stationary and mobile phases. If an automated method development system was used in the decision on phases it is likely that short columns were used for fast analysis in each step of the scouting.

The resolution equation shows that the next most significant term is the plate count or efficiency, N, and this can be optimized in a number of ways. N is inversely proportional to the particle size and directly proportional to the

length of a column and so smaller particle size and a longer column will give a higher plate number. The pressure rises with the inverse square of the particle size and proportionally with the length of the column. This is the reason that the 1290 Infinity LC system was designed to go to 1200 bar so that it can run sub-two-micron particles and column length can be increased to 100 mm or 150 mm. There are even examples of 100 mm and 150 mm columns linked to give 250 mm length. Resolution increases with the square root of N so doubling the length of the column will increase resolution by a factor of 1.4. What is achievable depends on the viscosity of the mobile phase as this relates directly to the pressure. Methanol mixtures will generate more back pressure than acetonitrile mixtures. Acetonitrile is often preferred because peak shapes are better and narrower in addition to the lower viscosity but methanol generally yields better selectivity (certainly for small molecules less than about 500 Da). The viscosity can be reduced by increasing the temperature but it should be remembered that this can change the selectivity of the separation. Experiment will show if this leads to increase or decrease in selectivity. As flow and pressure are increased it should be remembered that frictional heating inside the column will increase and that can lead to slightly increased dispersion and possibly a small selectivity change both of which could be seen as a reduction in resolution. The latter case might be offset by reducing the temperature of the thermostat by a few degrees and again experiment will reveal the answer.

The van Deemter curve shows that the optimum flow rate through an STM column is higher than for larger particles and is fairly flat as the flow rate increases. Typical, close to optimum, flow rates for STM columns are: 2 ml/min for 4.6 mm i.d.; and 0.4 ml/min for 2.1 mm i.d. columns.

In isocratic separations, increasing the retention factor, k, results in better resolution because the solute is retained longer. In gradient separations the retention is described by k^* in the following equation:

$$k^* = \frac{t_G}{\Delta\%B} \cdot \frac{F}{V_m} \cdot \frac{100}{S}$$

where:

- k^* = mean k value,
- t_G = time length of gradient (or segment of gradient) (min),
- F = flow (ml/min),
- V_m = column delay volume,

- $\Delta\%B$ = change in fraction of solvent B during the gradient,
- S = constant (ca. 4-5 for small molecules).

This shows that k and hence resolution can be increased by having a shallower gradient (2 to 5 %/min change is a guideline), higher flow rate and a smaller volume column. This equation also shows how to speed up an existing gradient – if the flow is doubled but the gradient time is halved, k^* remains constant and the separation looks the same but happens in half the time. Recently published research has shown how a shorter STM column (at temperatures above 40 °C) can generate higher peak capacity than a longer STM column by virtue of running it faster. (Refer to *Petersson et al., J.Sep.Sci, 31, 2346-2357, 2008, Maximizing peak capacity and separation speed in liquid chromatography*).

7
Troubleshooting and Diagnostics

Overview about the troubleshooting and diagnostic features.

Overview of the Module's Indicators and Test Functions

Status Indicators

The module is provided with two status indicators which indicate the operational state (prerun, run, and error states) of the module. The status indicators provide a quick visual check of the operation of the module.

Error Messages

In the event of an electronic, mechanical or hydraulic failure, the module generates an error message in the user interface. For each message, a short description of the failure, a list of probable causes of the problem, and a list of suggested actions to fix the problem are provided (see chapter Error Information).

Test Functions

A series of test functions are available for troubleshooting and operational verification after exchanging internal components (see Tests and Calibrations).

Diagnostic Signals

The module has several signals (internal temperatures, voltages and currents of lamps) that can be used for diagnosing baseline problems; see Diagnostic Signals.

Status indicators

Two status indicators are located on the front of the module. The lower left indicates the power supply status, the upper right indicates the module status.

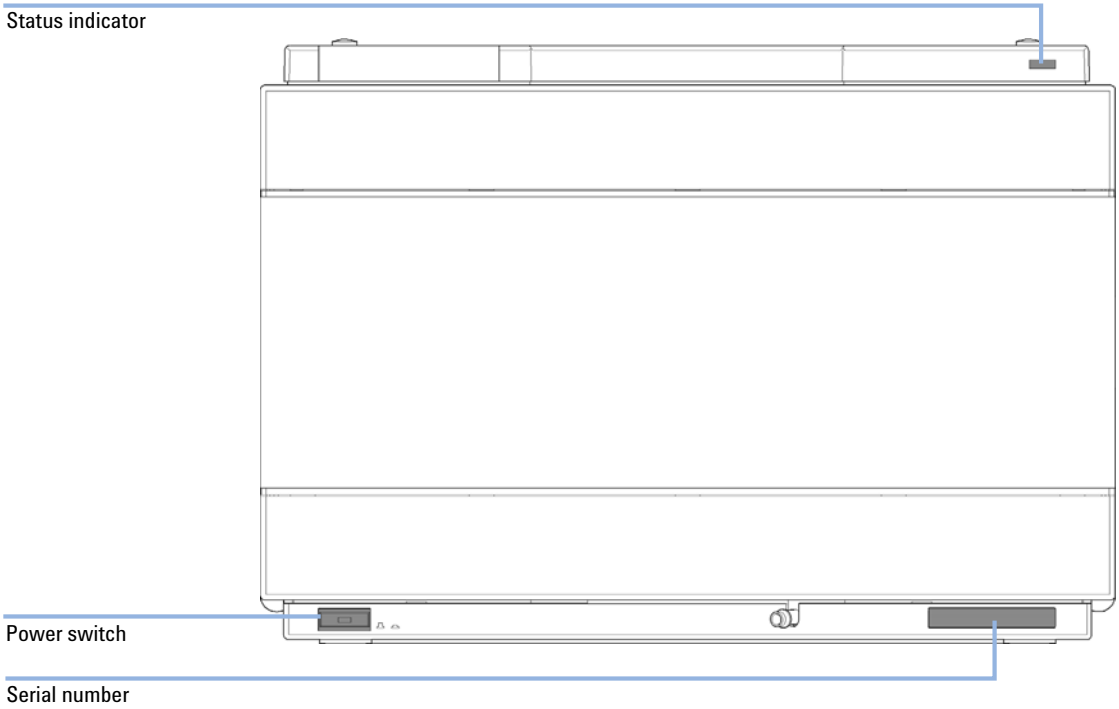

Figure 37 Location of Status Indicators

Power Supply Indicator

The power supply indicator is integrated into the main power switch. When the indicator is illuminated (*green*) the power is *ON*.

Module Status Indicator

The module status indicator indicates one of six possible module conditions:

- When the status indicator is *OFF* (and power switch light is on), the module is in a *prerun* condition, and is ready to begin an analysis.
- A *green* status indicator, indicates the module is performing an analysis (*run* mode).
- A *yellow* indicator indicates a *not-ready* condition. The module is in a not-ready state when it is waiting for a specific condition to be reached or completed (for example, immediately after changing a set point), or while a self-test procedure is running.
- An *error* condition is indicated when the status indicator is *red*. An error condition indicates the module has detected an internal problem which affects correct operation of the module. Usually, an error condition requires attention (e.g. leak, defective internal components). An error condition always interrupts the analysis.
- A *red-blinking* indicator indicates that the module is in resident mode (e.g. during update of main firmware).
- A *fast red-blinking* indicator indicates that the module is in boot loader mode (e.g. during update of main firmware). In such as case try to re-boot the module or try a cold-start.

Available Tests vs User Interfaces

- Depending on the user interface, the available tests and the screens/reports may vary (see Chapter *"Test Functions and Calibrations"*).
- Preferred tool should be the Agilent Diagnostic Software, see "Agilent Lab Advisor Software" on page 124.
- The Agilent ChemStation B.04.02 and above do not include any maintenance/test functions.
- Screenshots used within these procedures are based on the Agilent Lab Advisor Software.

Agilent Lab Advisor Software

The Agilent Lab Advisor software is a standalone product that can be used with or without data system. Agilent Lab Advisor software helps to manage the lab for high quality chromatographic results and can monitor in real time a single Agilent LC or all the Agilent GCs and LCs configured on the lab intranet.

Agilent Lab Advisor software provides diagnostic capabilities for all Agilent 1200 Infinity Series modules. This includes diagnostic capabilities, calibration procedures and maintenance routines for all the maintenance routines.

The Agilent Lab Advisor software also allows users to monitor the status of their LC instruments. The Early Maintenance Feedback (EMF) feature helps to carry out preventive maintenance. In addition, users can generate a status report for each individual LC instrument. The tests and diagnostic features as provided by the Agilent Lab Advisor software may differ from the descriptions in this manual. For details refer to the Agilent Lab Advisor software help files.

This manual provides lists with the names of Error Messages, Not Ready messages, and other common issues.

8
Error Information

This chapter describes the meaning of error messages, and provides information on probable causes and suggested actions how to recover from error conditions.

What Are Error Messages

Error messages are displayed in the user interface when an electronic, mechanical, or hydraulic (flow path) failure occurs which requires attention before the analysis can be continued (for example, repair, or exchange of consumables is necessary). In the event of such a failure, the red status indicator at the front of the module is switched on, and an entry is written into the module logbook.

General Error Messages

General error messages are generic to all Agilent series HPLC modules and may show up on other modules as well.

Timeout

The timeout threshold was exceeded.

Probable cause	Suggested actions
1 The analysis was completed successfully, and the timeout function switched off the module as requested.	Check the logbook for the occurrence and source of a not-ready condition. Restart the analysis where required.
2 A not-ready condition was present during a sequence or multiple-injection run for a period longer than the timeout threshold.	Check the logbook for the occurrence and source of a not-ready condition. Restart the analysis where required.

Shut-Down

An external instrument has generated a shut-down signal on the remote line.

The module continually monitors the remote input connectors for status signals. A LOW signal input on pin 4 of the remote connector generates the error message.

Probable cause	Suggested actions
1 Leak detected in another module with a CAN connection to the system.	Fix the leak in the external instrument before restarting the module.

Probable cause	Suggested actions
2 Leak detected in an external instrument with a remote connection to the system.	Fix the leak in the external instrument before restarting the module.
3 Shut-down in an external instrument with a remote connection to the system.	Check external instruments for a shut-down condition.

Remote Timeout

A not-ready condition is still present on the remote input. When an analysis is started, the system expects all not-ready conditions (for example, a not-ready condition during detector balance) to switch to run conditions within one minute of starting the analysis. If a not-ready condition is still present on the remote line after one minute the error message is generated.

Probable cause	Suggested actions
1 Not-ready condition in one of the instruments connected to the remote line.	Ensure the instrument showing the not-ready condition is installed correctly, and is set up correctly for analysis.
2 Defective remote cable.	Exchange the remote cable.
3 Defective components in the instrument showing the not-ready condition.	Check the instrument for defects (refer to the instrument's documentation).

Synchronization Lost

During an analysis, the internal synchronization or communication between one or more of the modules in the system has failed.

The system processors continually monitor the system configuration. If one or more of the modules is no longer recognized as being connected to the system, the error message is generated.

Probable cause	Suggested actions
1 CAN cable disconnected.	• Ensure all the CAN cables are connected correctly. • Ensure all CAN cables are installed correctly.
2 Defective CAN cable.	Exchange the CAN cable.
3 Defective main board in another module.	Switch off the system. Restart the system, and determine which module or modules are not recognized by the system.

Leak Sensor Short

The leak sensor in the module has failed (short circuit).

The current through the leak sensor is dependent on temperature. A leak is detected when solvent cools the leak sensor, causing the leak-sensor current to change within defined limits. If the current increases above the upper limit, the error message is generated.

Probable cause	Suggested actions
1 Defective flow sensor.	Please contact your Agilent service representative.
2 Leak sensor incorrectly routed, being pinched by a metal component.	Please contact your Agilent service representative.

Leak Sensor Open

The leak sensor in the module has failed (open circuit).

The current through the leak sensor is dependent on temperature. A leak is detected when solvent cools the leak sensor, causing the leak-sensor current to change within defined limits. If the current falls outside the lower limit, the error message is generated.

Probable cause	Suggested actions
1 Leak sensor not connected to the main board.	Please contact your Agilent service representative.
2 Defective flow sensor.	Please contact your Agilent service representative.

Compensation Sensor Open

The ambient-compensation sensor (NTC) on the main board in the module has failed (open circuit).

The resistance across the temperature compensation sensor (NTC) on the main board is dependent on ambient temperature. The change in resistance is used by the leak circuit to compensate for ambient temperature changes. If the resistance across the sensor increases above the upper limit, the error message is generated.

Probable cause	Suggested actions
1 Defective main board.	Please contact your Agilent service representative.

Compensation Sensor Short

The ambient-compensation sensor (NTC) on the main board in the module has failed (short circuit).

The resistance across the temperature compensation sensor (NTC) on the main board is dependent on ambient temperature. The change in resistance is used by the leak circuit to compensate for ambient temperature changes. If the resistance across the sensor falls below the lower limit, the error message is generated.

Probable cause	Suggested actions
1 Defective main board.	Please contact your Agilent service representative.

Fan Failed

The cooling fan in the module has failed.

The hall sensor on the fan shaft is used by the main board to monitor the fan speed. If the fan speed falls below a certain limit for a certain length of time, the error message is generated.

Probable cause	Suggested actions
1 Fan cable disconnected.	Please contact your Agilent service representative.
2 Defective fan.	Please contact your Agilent service representative.
3 Defective main board.	Please contact your Agilent service representative.

Leak

A leak was detected in the module.

The signals from the two temperature sensors (leak sensor and board-mounted temperature-compensation sensor) are used by the leak algorithm to determine whether a leak is present. When a leak occurs, the leak sensor is cooled by the solvent. This changes the resistance of the leak sensor which is sensed by the leak-sensor circuit on the main board.

Probable cause	Suggested actions
1 Loose fittings.	Ensure all fittings are tight.
2 Broken capillary.	Exchange defective capillaries.

Open Cover

The top foam has been removed.

Probable cause	Suggested actions
1 Foam not activating the sensor.	Please contact your Agilent service representative.
2 Dirty or defective sensor.	Please contact your Agilent service representative.

Cover Violation

The top foam has been removed.

The sensor on the main board detects when the top foam is in place. If the foam is removed while the lamps are on (or if an attempt is made to switch on for example the lamps with the foam removed), the lamps are switched off, and the error message is generated.

Probable cause	Suggested actions
1 The top foam was removed during operation.	Please contact your Agilent service representative.
2 Foam not activating the sensor.	Please contact your Agilent service representative.

Pump Error Messages

These errors are pump specific.

Pressure of Binary Pump above upper limit

The pressure has exceeded the upper pressure limit.

- Error number: EE22014
- Parameter: Measured pressure

Probable cause	Suggested actions
1 Blockage in flow path after the pressure sensor.	• Check for blockages in the LC system, e.g. purge valve, Jet Weaver, degraded column, column frits, needle, needle seat, capillaries etc. • Check for particles in the solvent.
2 Inappropriate settings (pressure limit, flow rate).	• Decrease flow rate. • Increase pressure limit.

Pressure below lower limit

The pressure has dropped below the lower limit.

- Error number: EE22015
- Parameter: None

Probable cause	Suggested actions
1 Leak	Check for leaks.
2 Bottle empty	Check bottle filling.
3 Wrong solvent (viscosity)	Check solvent.
4 Inappropriate setting	Check flow rate and lower pressure limit.
5 Column degradation	Replace column.

Target pressure not reached for Binary Pump degasser

The target pressure of the Binary Pump degasser has not been reached within the expected time.

- Error number: EE22031
- Parameter: Pressure in mbar

Probable cause	Suggested actions
1 Condensation in degasser chamber due to temperature fluctuation.	Equilibrate and restart module.
2 Degasser is defect.	Replace degasser.

Solvent counter exceeded limit

The counter for the solvent volume has exceeded the limit, which has been set in the user interface.

- Error number: EE22055
- Parameter: 0 for channel A, 1 for channel B

Probable cause	Suggested actions
1 No solvent present.	Refill solvent bottle.
2 Inappropriate setting.	Check solvent counter setting in user interface.

Waste counter limit exceeded

The counter for the waste volume has exceeded the limit, which has been set in the user interface.

- Error number: EE 22056
- Parameter: None

Probable cause	Suggested actions
1 The waste container is full.	Empty waste container.
2 Inappropriate setting for waste counter.	• Reset waste counter. • Adjust waste counter limit.

Flow rate limit exceeded

The flow rate of the Binary Pump has exceeded the limit, while the pump runs in pressure controlled mode, e.g. during a pressure test.

- Error number: EE 22064
- Parameter: None

Probable cause	Suggested actions
1 Leak	Check for leaks in the pump and flow path.
2 Bottle empty.	Fill solvent bottle
3 Shutoff valve closed.	Open Shutoff valve.
4 Drift of pressure sensor (unlikely for short tests taking some minutes).	Replace pressure sensor.

Binary Pump shutdown during analysis

The Binary Pump has been shut down by the control software or control module during an analysis.

- Error number: EE22065
- Parameter: 0 for off, 1 for standby

Probable cause	Suggested actions
1 Pump has been shut down.	Restart pump.

Reading the pump encoder tag failed

Reading the pump encoder tag has failed.

- Error number: EE22402
- Parameter: 1-4 referring to pump drive

Probable cause	Suggested actions
1 Defect connection between encoder and main board.	Please contact your Agilent service representative.
2 Missing or defect tag Defect connection between tag and encoder.	Please contact your Agilent service representative.

Writing the pump encoder tag failed

Writing the pump encoder tag has failed.

- Error number: EE22405
- Parameter: 1-4 referring to pump drive

Probable cause	Suggested actions
1 Defect connection between encoder and main board.	Please contact your Agilent service representative.
2 Defect tag Defect connection between tag and encoder.	Please contact your Agilent service representative.

Pump drive blocked or encoder failed

Pump drive blocked or encoder failed.

- Error number: EE22406
- Parameter: None

Probable cause	Suggested actions
1 Blockage of the pump drive Drive encoder failed.	Please contact your Agilent service representative.

Drive current too low

The current consumption of the pump drive is too low.

- Error number: EE22407
- Parameter: 1-4 referring to pump drive

Probable cause	Suggested actions
1 Drive motor defect.	Please contact your Agilent service representative.
2 Wrong/missing connection of pump drive to main board.	Please contact your Agilent service representative.

Drive current too high

The current consumption of the pump drive is too high.

- Error number: EE22409
- Parameter: 1-4 referring to pump drive

Probable cause	Suggested actions
1 Blockage of system before pressure sensor.	Check for blockage of e.g. outlet valve filter frit, purge valve, heat exchanger.
2 Drive motor defect.	Please contact your Agilent service representative.

Drive timeout

Drive is blocked mechanically, fails during initialization.

- Error number: EE22410
- Parameter: 1-4 referring to pump drive

Probable cause	Suggested actions
1 Blockage of pump drive Drive motor defect.	Please contact your Agilent service representative.

Overcurrent of pump drive

The current consumption of the pump drive is too high.

- Error number: EE22411
- Parameter: 1-4 referring to pump drive

Probable cause	Suggested actions
1 Blockage of system before pressure sensor.	Check for blockage of e.g. outlet valve filter frit, purge valve, heat exchanger.
2 Drive motor defect.	Please contact your Agilent service representative.

Overcurrent of solvent selection valve (SSV)

Overcurrent of solvent selection valve (SSV).

- Error number: EE22412
- Parameter: None

Probable cause	Suggested actions
1 Valve defect.	Replace the solvent selection valve.

Deliver underrun

Internal error.

- Error number: EE22413
- Parameter: None

Probable cause	Suggested actions
1 Internal error.	Please contact your Agilent service representative.

Defect connection between main board and pump drive encoder

Defect connection between main board and pump drive encoder.

- Error number: EE22414
- Parameter: 1-4 referring to pump drive

Probable cause	Suggested actions
1 Defect connection between main board and pump drive encoder.	Please contact your Agilent service representative.
2 Defect encoder.	Please contact your Agilent service representative.

Pump drive encoder defect

Defect pump drive encoder.

- Error number: EE22415
- Parameter: 1-4 referring to pump drive

Probable cause	Suggested actions
1 Defect encoder.	Please contact your Agilent service representative.

Purge valve failed

Lost steps of the purge valve encoder.

- Error number: EE22417
- Parameter: None

Probable cause	Suggested actions
1 Purge valve drive mechanically blocked or defect.	• Check installation of purge valve head. • Please contact your Agilent service representative.

Reading of purge valve tag failed

Reading the purge valve tag failed.

- Error number: EE22420
- Parameter: None

Probable cause	Suggested actions
1 Reading of purge valve tag failed.	Check cable connection.
2 Purge valve head tag defect or empty.	Replace purge valve head.
3 Purge valve tag reader is defect.	Please contact your Agilent service representative.

Pump drive encoder rollover

Invalid pump drive encoder signals have been detected.

- Error number: EE 22424
- Parameter: 1-4 referring to pump drive

Probable cause	Suggested actions
1 Pump drive encoder is defect.	Please contact your Agilent service representative.

Drive position limit

Internal error.

- Error number: EE 22425
- Parameter: 1-4 referring to pump drive

Probable cause	Suggested actions
1 Internal error.	Please contact your Agilent service representative.

Insufficient power of drive encoder LED

Insufficient power of drive encoder LED.

- Error number: EE 22426
- Parameter: 1-4 referring to pump drive

Probable cause	Suggested actions
1 Pump drive encoder is defect.	Please contact your Agilent service representative.

Drive encoder error

An error has occurred for the pump drive encoder.

- Error number: EE 22427- EE 22430
- Parameter: 1-4 referring to pump drive

Probable cause	Suggested actions
1 Pump drive encoder is defect.	Please contact your Agilent service representative.

Writing the purge valve tag failed

Writing the purge valve tag failed.

- Error number: EE 22431
- Parameter: None

Probable cause	Suggested actions
1 Purge valve head tag defect.	Replace purge valve head.
2 Purge valve tag reader is defect.	Please contact your Agilent service representative.

Current of primary pump drive too high

The current of the primary pump drive is too high.

- Error number: EE 22433
- Parameter: 1 or 4 referring to pump drive

Probable cause	Suggested actions
1 Blockage of flow path between primary pump head and pressure sensor, e.g. of the heat exchanger.	• Check for blockages in flow path. • Please contact your Agilent service representative.
2 Primary pump drive is defect.	Please contact your Agilent service representative.

Current of secondary pump drive too high

The current of the secondary pump drive is too high.

- Error number: EE 22434
- Parameter: 2 or 3 referring to pump drive

Probable cause	Suggested actions
1 Blockage of flow path between secondary pump head and pressure sensor, e.g. of the heat exchanger.	• Check for blockages in flow path. • Please contact your Agilent service representative.
2 Secondary pump drive is defect.	Please contact your Agilent service representative.

Unknown purge valve type

The type information of the purge valve is invalid.

- Error number: EE 22435
- Parameter: None

Probable cause	Suggested actions
1 Wrong valve head installed.	Check or replace purge valve head.
2 Valve head has invalid RFID tag content.	Check or replace purge valve head.

Pump drive encoder error

The pump drive encoder has generated no signal.

- Error number: EE 22437
- Parameter: 1-4 referring to pump drive

Probable cause	Suggested actions
1 Pump drive encoder is defect.	Please contact your Agilent service representative.

Pump drive error

The pump drive failed during calibration.

- Error number: EE 22438, EE 22439
- Parameter: 1-4 referring to pump drive

Probable cause	Suggested actions
1 Pump drive motor defect or mechanically blocked.	Please contact your Agilent service representative.

Pump drive stroke blocked

The pump drive movement is blocked.

- Error number: EE 22441
- Parameter: 1-4 referring to pump drive

Probable cause	Suggested actions
1 Pump drive motor is mechanically blocked.	Please contact your Agilent service representative.

Pump drive stop not found

The pump drive stop has not been found.

- Error number: EE 22442
- Parameter: 1-4 referring to pump drive

Probable cause	Suggested actions
1 Pump drive spindle is defect.	Please contact your Agilent service representative.

Pressure sensor calibration wrong or missing

Pressure sensor calibration wrong or missing.

- Error number: EE 22443
- Parameter: None

Probable cause	Suggested actions
1 Pressure sensor calibration wrong or missing.	• Replace pressure sensor. • Please contact your Agilent service representative.

9
Test Functions and Calibrations

This chapter describes the tests for the module.

Introduction

All tests are described based on the Agilent Lab Advisor Software B.01.04. Other user interfaces may not provide any test or just a few.

Table 21 Interfaces and available test functions

Interface	Comment	Available Function
Agilent Instrument Utilities	Maintenance tests available	• System pressure test
Agilent Lab Advisor	All tests are available	• System pressure test • Pump head leak test
Agilent ChemStation	No tests available Adding of pressure to chromatographic signals possible	• Pressure • Pressure ripple • Temperature main board

Agilent Instant Pilot	Some tests are available	• System pressure test
		• Monitoring of values
		  ◦ Pressure
		  ◦ Pressure ripple
		  ◦ Flow (in case of operating pressure)

For details on the use of the interface refer to the interface documentation.

System Pressure Test

The test determines the leak rate of the system between pump outlet valves and a blank nut. The blank nut can be positioned at different locations in the system before the flow cell, to determine and verify the leak rate of individual modules and components. The test allows for setting the pressure at which the test is performed. The leak rate of high pressure parts is not always a linear function and therefore it is recommended to perform the test at a pressure that corresponds to the normal operating pressure of the system.

When

In case of a suspected leak. To verify successful execution of maintenance tasks.

Parts required

#	p/n	Description
1	01080-83202	Blank nut

Preparations

Solvents must be present in both channels.

1 Run the **System Pressure Test** with the recommended user interface (for further information see Online-Help of user interface).

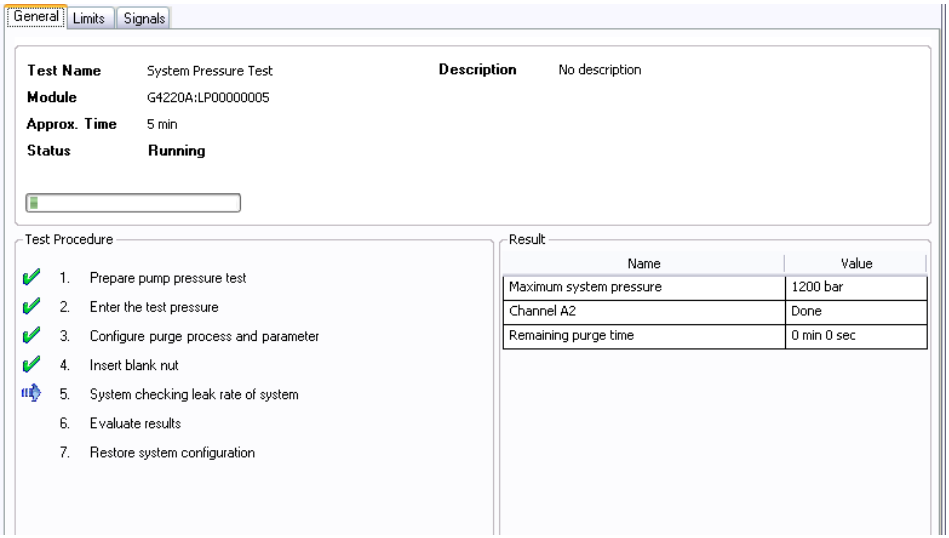

Figure 38 System Pressure Test – Result

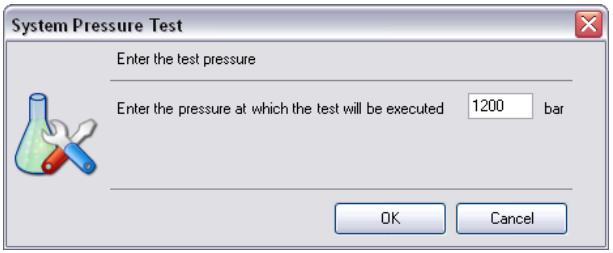

Figure 39 System Pressure Test – dynamic pressure input

System Pressure Test Evaluation

Test Failed

	Probable cause	Suggested actions
1	Damaged blank nut (poorly shaped from over tightening)	Before investigating any other possible sources of failure make sure that the blank nut you are using is in a good condition and properly tightened.
2	Pump leakages	Perform the Pump Head Leak test.
3	Loose or leaky fittings	Tighten the fittings or replace capillaries.
4	Autosampler leakages	Perform the Autosampler Leak test.
5	Themostatted Column Compartment valve leakages	Replace the TCC valve rotor seal.

NOTE Notice the difference between *error* in the test and a *failed* result! An *error* is caused by an abnormal termination during the operation of the test, whereas a *failed* result indicates that the test result were not within the specified limits.

Pump Head Leak Test

The test determines the leakage of the individual pump heads, by blocking each pump head separately and pressurizing to a specified level. The flow is delivered by the secondary piston and thereby the parts between the outlet ball valve and the purge valve are tested for leak tightness. The test allows for setting the pressure at which the test is performed. The leak rate of high pressure parts is not always a linear function and therefore it is recommended to perform the test at a pressure that corresponds to the normal operating pressure of the system.

When Excessive pressure ripple or suspected pump performance problems.

Preparations Solvents must be present in both channels.

1 Run the **Pump Head Leak Test** with the recommended user interface (for further information see Online-Help of user interface).

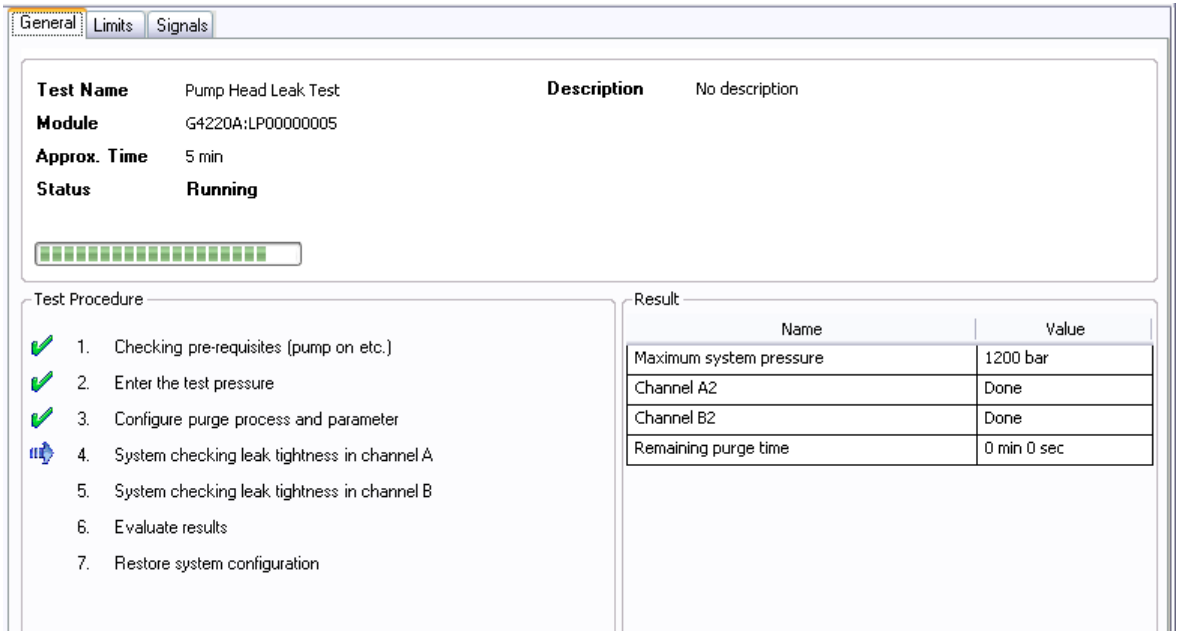

Figure 40 Pump Head Leak Test – Results

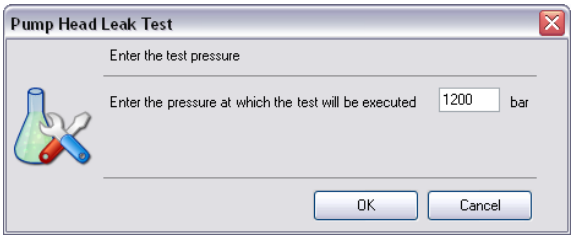

Figure 41 Pump Head Leak Test - dynamic pressure input

Pump Head Leak Test Evaluation

Test Failed

Probable cause	Suggested actions
1 Loose or leaky fittings	Tighten the fittings or replace capillaries.
2 Leaky High Pressure Filter Assembly	• Tighten Filter housing and fitting. • NOTE - Fittings should only be tightened in a system that is not pressurized, for better chance of success. • Re-run test.
3 Damaged pump seals or pistons	• Exchange the pump head or pump seals. • NOTE - A wrongly installed pump seal will reduce the life time of the pump seal considerably.
4 Leaky outlet ball valve	Exchange pump head or outlet ball valve.
5 Leaky purge valve	Exchange Purge valve rotor seal.

NOTE Notice the difference between *error* in the test and a *failed* result! An *error* is caused by an abnormal termination during the operation of the test, whereas a *failed* result indicates that the test result were not within the specified limits.

10 Maintenance

This chapter describes the maintenance of the Agilent 1290 Infinity Binary Pump.

Introduction to Maintenance

Figure 42 on page 156 shows the main user accessible assemblies of the Agilent 1290 Infinity Binary Pump. These parts can be accessed from the front (simple repairs) and don't require to remove the pump from the system stack.

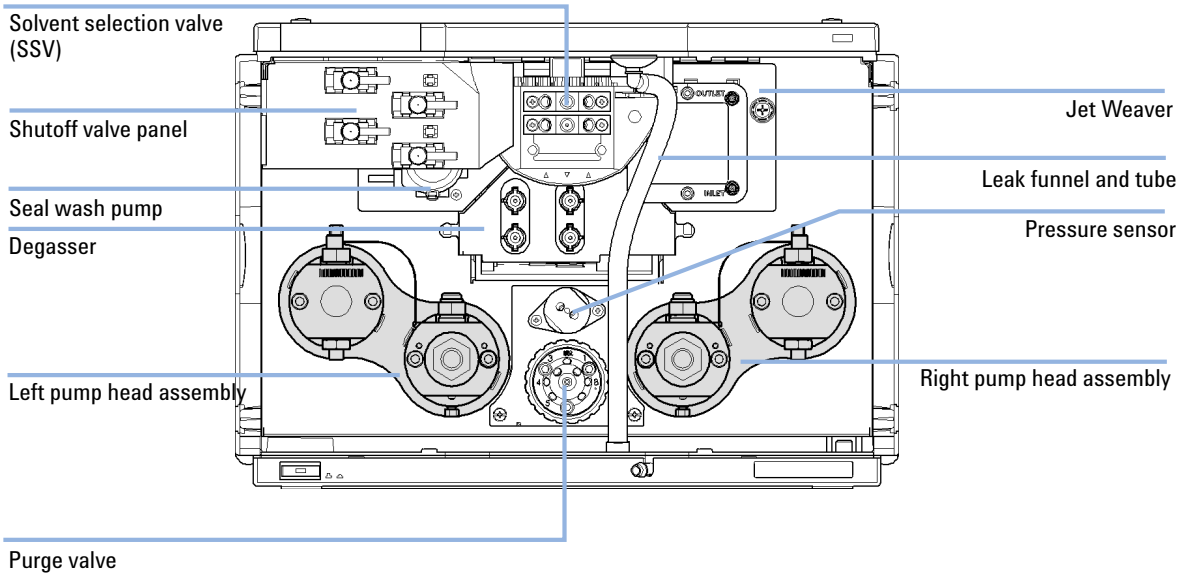

Figure 42 Maintenance Parts

Figure 43 on page 157 shows the flow connections between these main assemblies.

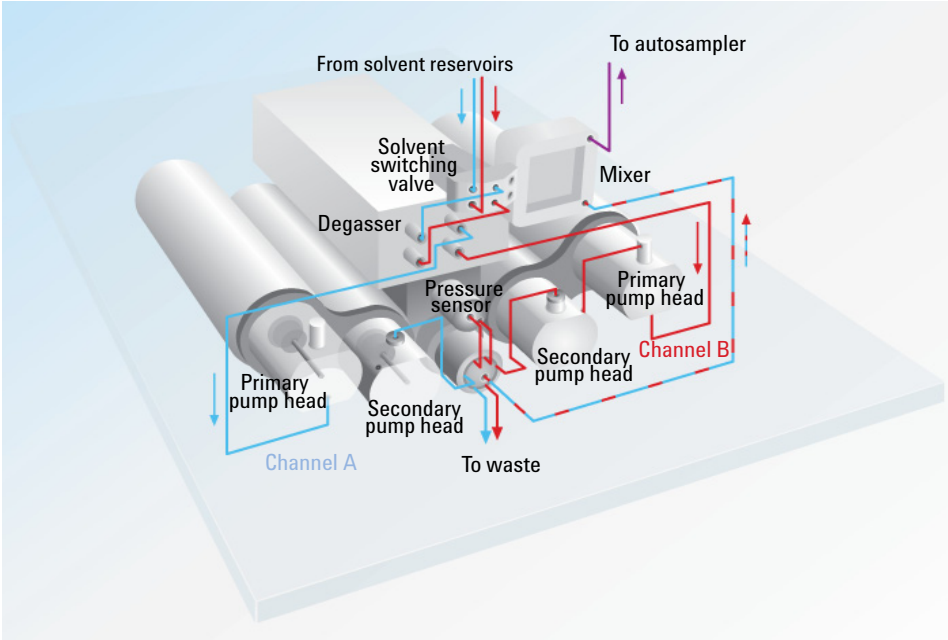

Figure 43 Flow Connections

Warnings and Cautions

WARNING

Toxic, flammable and hazardous solvents, samples and reagents

The handling of solvents, samples and reagents can hold health and safety risks.

- ➔ When working with these substances observe appropriate safety procedures (for example by wearing goggles, safety gloves and protective clothing) as described in the material handling and safety data sheet supplied by the vendor and follow good laboratory practice.
- ➔ The amount of substances should be reduced to the minimal volume required for the analysis.
- ➔ Do not operate the instrument in an explosive atmosphere.

WARNING

Electrical shock

Repair work at the module can lead to personal injuries, e.g. shock hazard, when the cover is opened.

- ➔ Do not remove the metal top cover of the module. No serviceable parts inside.
- ➔ Only certified persons are authorized to carry out repairs inside the module.

WARNING

Sharp metal edges

Sharp-edged parts of the equipment may cause injuries.

- ➔ To prevent personal injury, be careful when getting in contact with sharp metal areas.

WARNING

Personal injury or damage to the product

Agilent is not responsible for any damages caused, in whole or in part, by improper use of the products, unauthorized alterations, adjustments or modifications to the products, failure to comply with procedures in Agilent product user guides, or use of the products in violation of applicable laws, rules or regulations.

→ Use your Agilent products only in the manner described in the Agilent product user guides.

CAUTION

Safety standards for external equipment

→ If you connect external equipment to the instrument, make sure that you only use accessory units tested and approved according to the safety standards appropriate for the type of external equipment.

Overview of Maintenance

The following pages describe maintenance (simple repairs) of the module that can be carried out without opening the main cover.

Cleaning the Module

The module case should be kept clean. Cleaning should be done with a soft cloth slightly dampened with water or a solution of water and mild detergent. Do not use an excessively damp cloth as liquid may drip into the module.

WARNING

Liquid dripping into the electronic compartment of your module.

Liquid in the module electronics can cause shock hazard and damage the module.

→ Do not use an excessively damp cloth during cleaning.

→ Drain all solvent lines before opening any fittings.

Installing Fittings and Capillaries

WARNING

Solvent can spray under high pressure.

➔ Observe appropriate safety procedures (for example, goggles, safety gloves and protective clothing), when opening flow path.

➔ Never tighten a capillary connection under pressure.

NOTE

The lifetime of a fitting depends on how firmly it has been tightened; firm tightening reduces the lifetime.

If fitting has been overtightened, replace it.

1 Install fittings and capillaries.
2 Tighten fittings and capillaries.

Replacing the Shutoff Valve Panel

When If a shutoff valve is damaged or the panel needs to be removed for other repair procedures.

Parts required

#	p/n	Description
1	5067-4124	Shutoff valve
1	G4220-40004	Shutoff valve panel
2	G4220-60035	Tubing kit 140 mm SSV to shutoff valve or degassing unit (2 tubes)

Preparations In order to avoid leaks, remove tubings from the solvent bottles.

1 Unscrew tubing connections between shutoff valves, solvent bottles and the solvent selection valve.

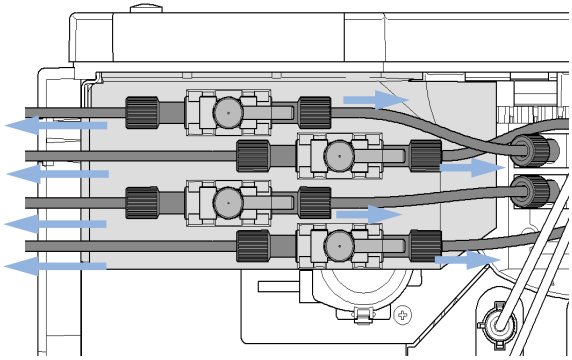

2 If a single valve shall be replaced, it can be pulled to the front for removing it from its mounting

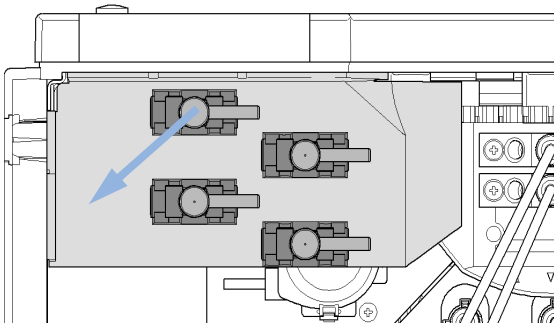

3 Remove the shutoff valve panel by pulling it downwards 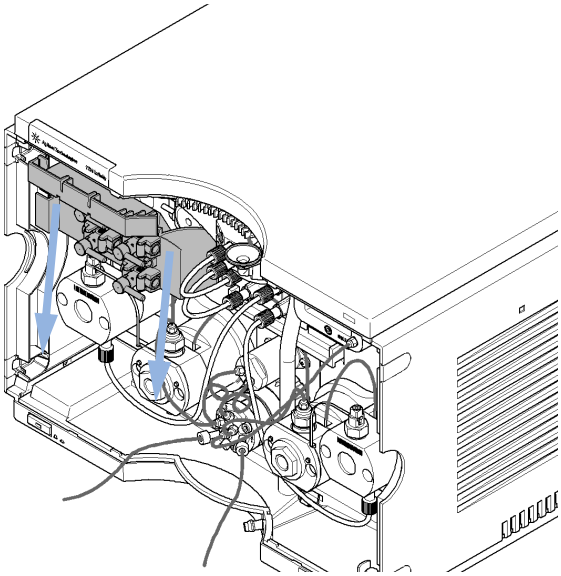	**4** After replacing the panel or after completion of other maintenance, re-install the panel and all flow connections. 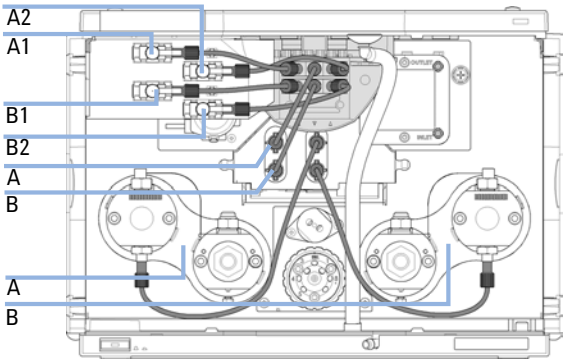

Replacing the Inlet valve

When If Inlet valve is defective.

Parts required

#	Description
G4220-60022	Inlet valve

1 Close the shut off valves to avoid solvent leaks.

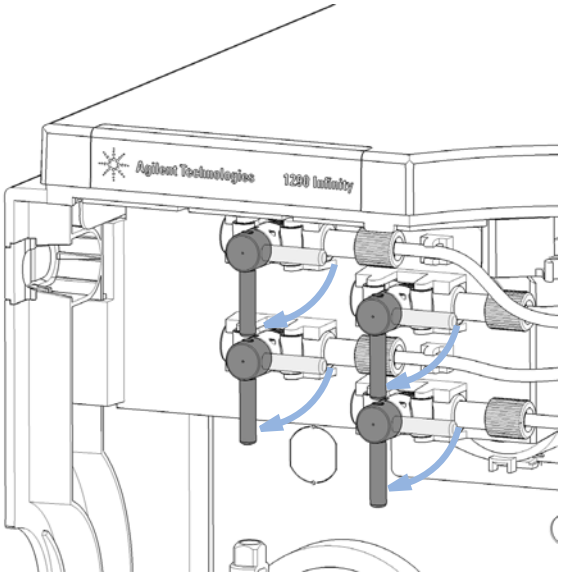

2 Unscrew the tubing at the inlet valve.

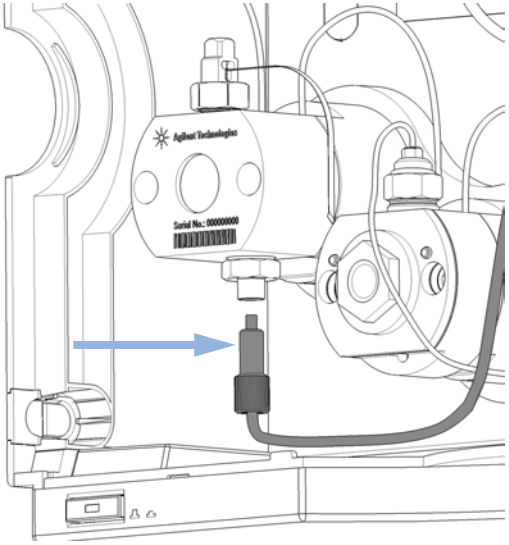

3 With a 14 mm wrench, unscrew the inlet valve and remove it.

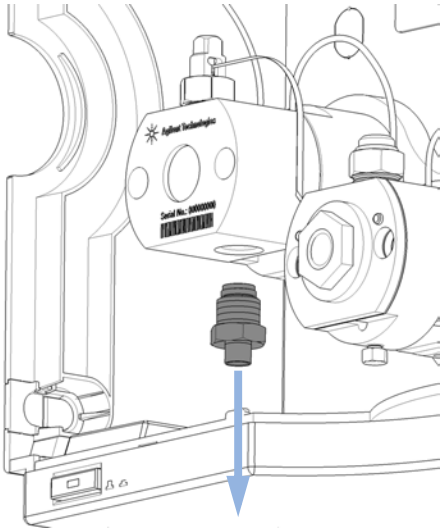

4 Install inlet valve and tighten it with a 14 mm wrench.

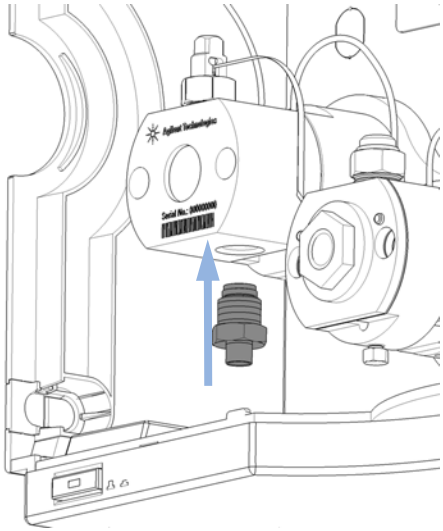

5 Attach the inlet tubing at the inlet valve.

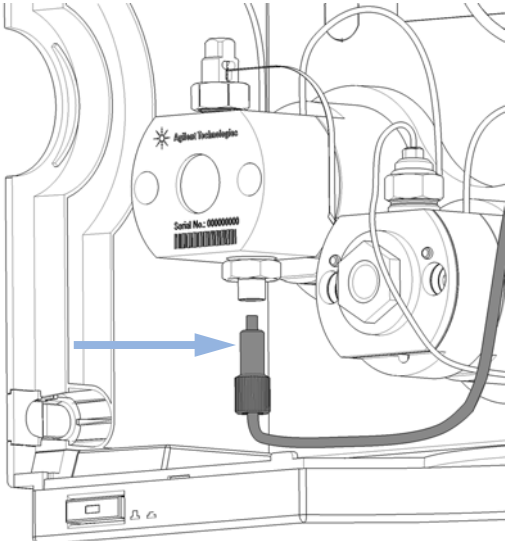

6 Open the shut off valves and purge the system to remove air.

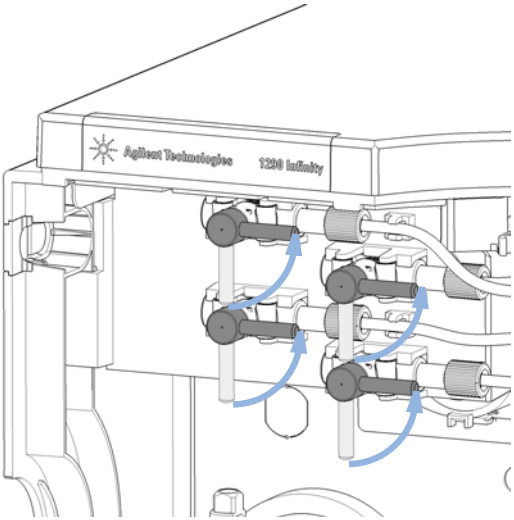

Replacing the Outlet valve

When If Outlet valve is defective.

Parts required

#	Description
G4220-60028	Outlet valve

1 Close the shut off valves to avoid solvent leaks.

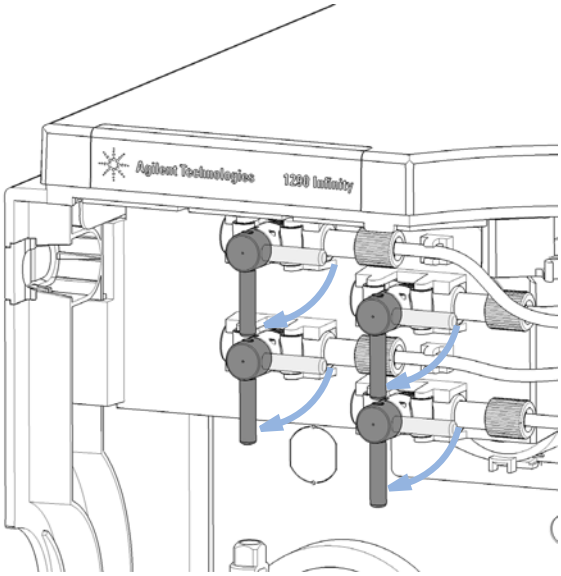

2 Lift up the capillary and remove it from the primary pump head.

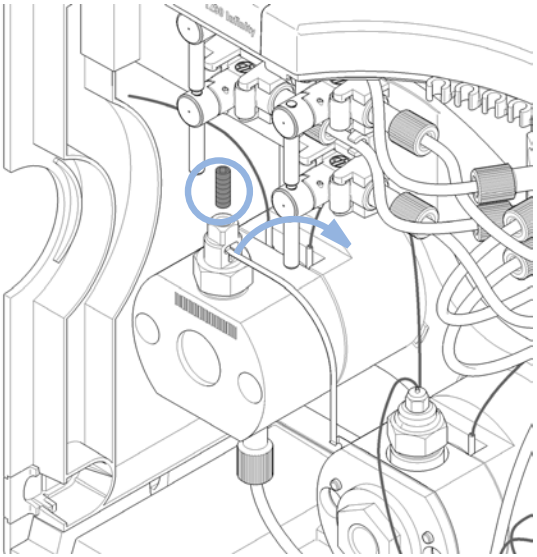

3 Unscrew the outlet valve with a 14 mm wrench.

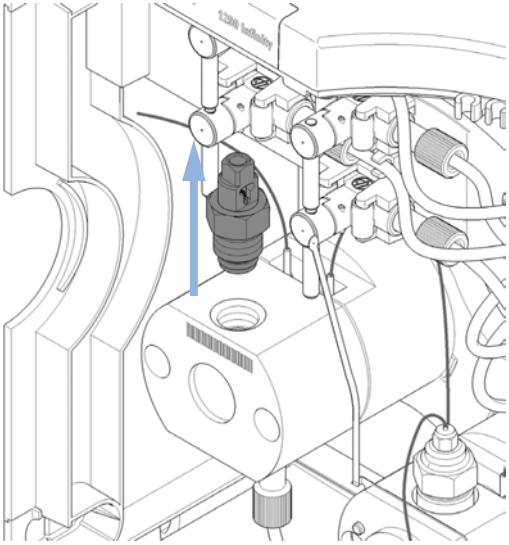

4 Insert outlet valve and tighten with a 14 mm wrench.

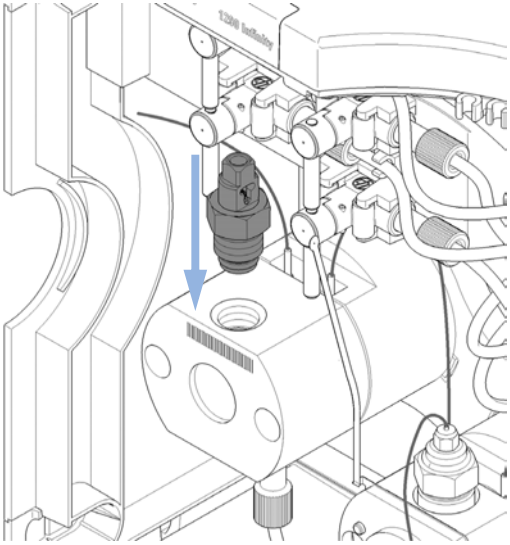

5 Insert the heat exchanger capillary into the outlet of the outlet valve. Using a torque wrench with a 2.5 mm hex bit, set 3 Nm and close the hex screw at the top of the outlet.

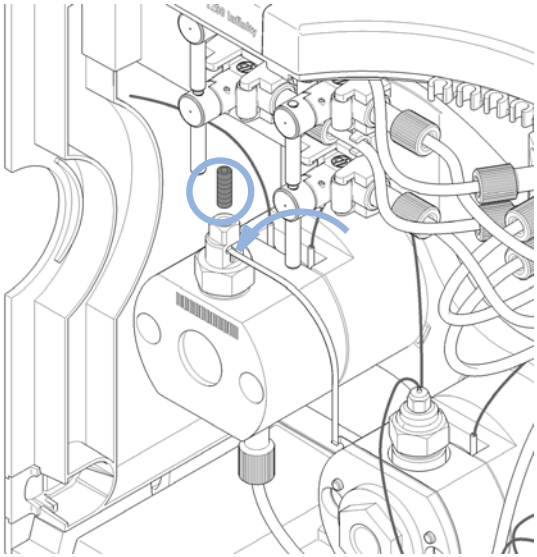

6 Open the shut off valves and purge the system to remove air.

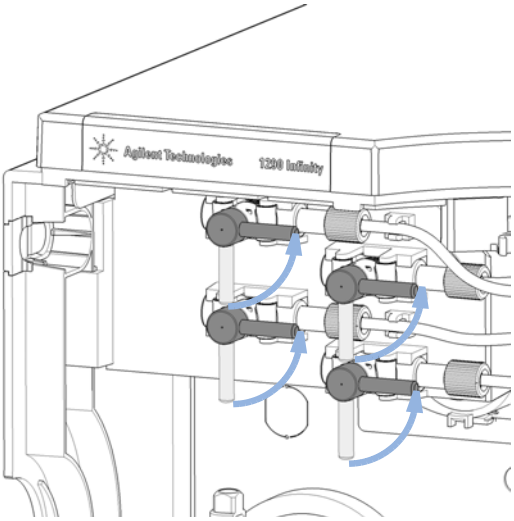

Replacing the Solvent Selection Valve (SSV)

When In case of problems with the solvent selection valve

Parts required

#	p/n	Description
1	G4280-60029	Solvent selection valve
4	G4220-60035	Tubing kit 140 mm SSV to shutoff valve or degassing unit (2 tubes)

1 Close shut-off valve. Remove tubing connections between the SSV and the solvent shut-off valves and the SSV and the degassing unit inlets.

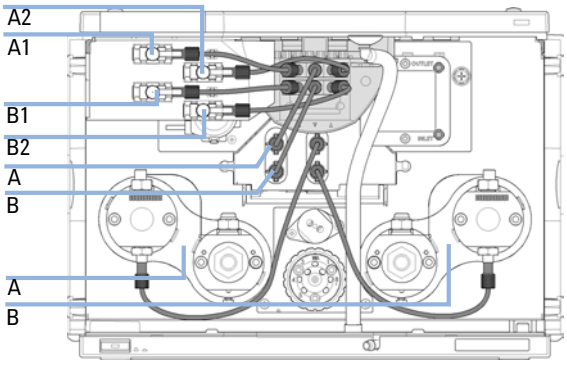

2 Push down the SSV panel for removing it.

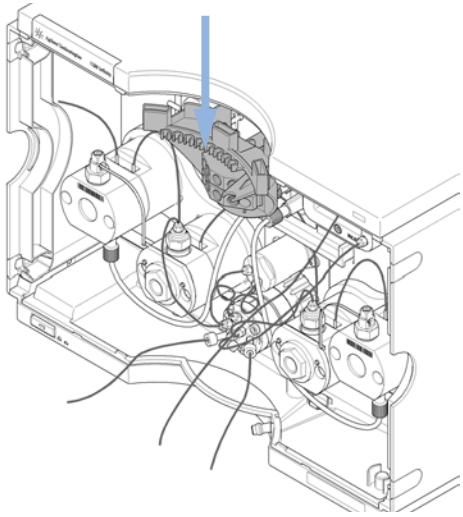

3 Remove the connector by pushing up the small clip at the bottom of the connector. 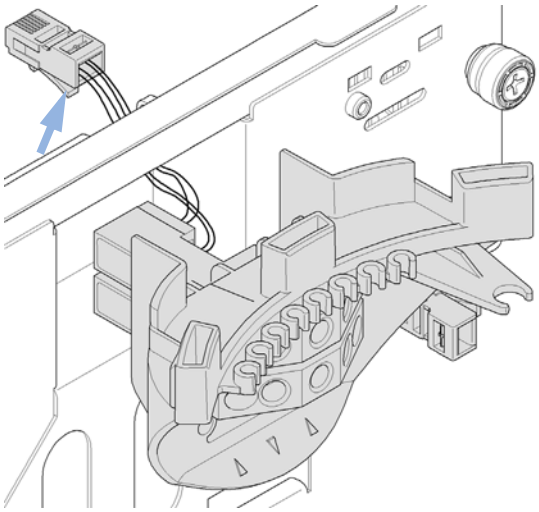	**4** Install a new SSV by inserting the connector and clipping the SSV panel to the module top panel. Then re-install all tubing connections, open shut-off valve and purge valve. 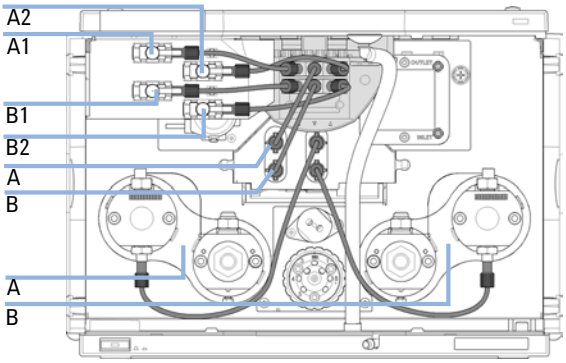

Changing configuration or replacing the Jet Weaver

When In case of low mixing performance

Tools required
- 1 /4 inch wrench
- 3 mm hex key

Parts required

#	p/n	Description
1	G4220-60006	Jet Weaver
1	G4220-87000	Capillary SST Valve to Jet Weaver 300 mm x 0.17 mm I.D.

1 Remove capillary connections from the Jet Weaver.

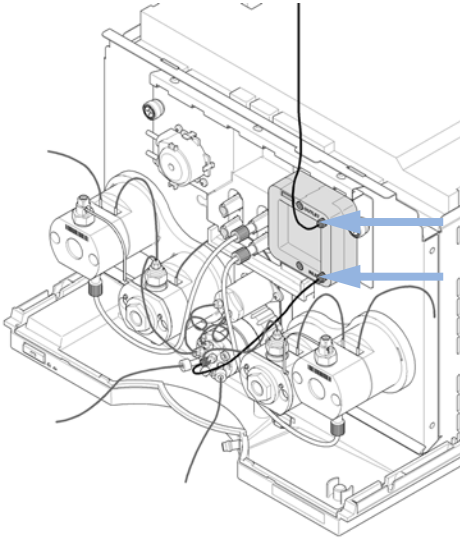

2 Remove the hex screws that fix the Jet Weaver to the pump housing.

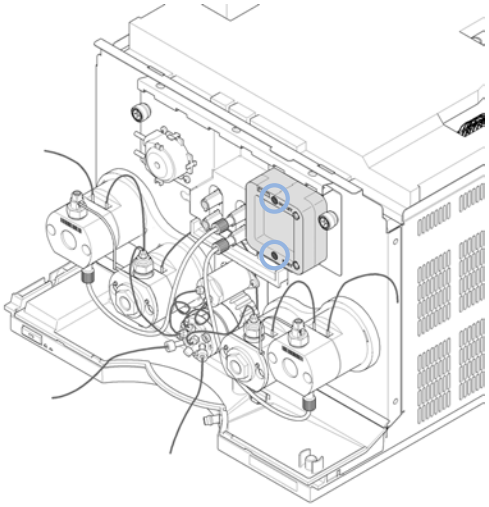

NOTE

The Jet Weaver has a front and a rear side with different internal volumes (35 / 100 µL) that are optimized for a low delay volume or best mixing performance. Please refer to recommendations in the *Agilent 1290 Infinity System Manual*.

3 Install new Jet Weaver or flip the Jet Weaver for backside.

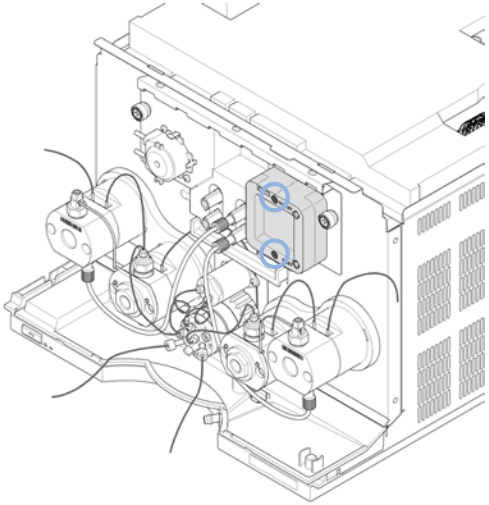

4 Reinstall the capillary connections.

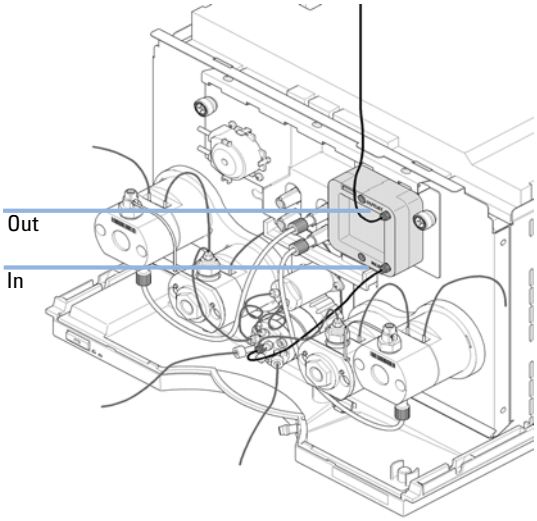

The inlet at the bottom of the Jet Weaver is connected to the central port of the pump valve by a capillary (length 300 mm, 0.17 mm i.d.). The outlet at the top is connected to the autosampler.

Replacing the Seal Wash Pump

When In case of wear of the seal wash pump

Parts required

#	p/n	Description
1	5042-8507	Peristaltic Pump for Seal Wash

Preparations Remove the shutoff valve panel ("Replacing the Shutoff Valve Panel" on page 163) and flow connections from and to the seal wash pump

1 For removing the seal wash pump, press the clips (1) and pull the pump to the front (2).

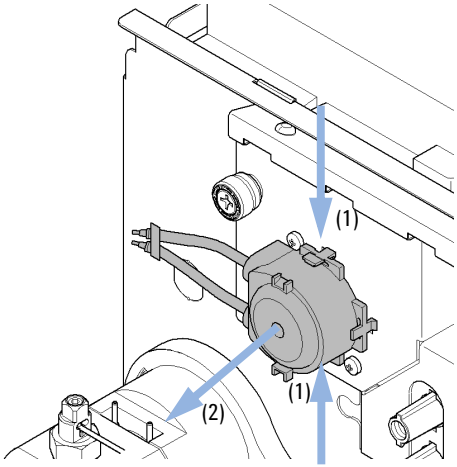

2 Insert the pump clips to the holes in the binary pump housing.

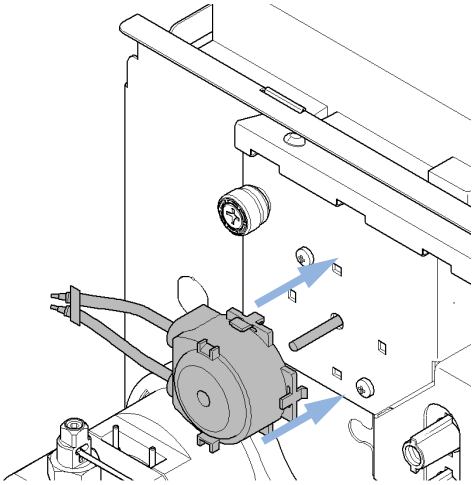

Releasing a Stuck Inlet Valve

When If inlet valve is stuck, or if pump is not generating pressure after being turned off for an extended period of time.

NOTE Before the system is turned off for an extended period of time, it should be flushed with at least 10 % IPA to prevent inlet valves from getting stuck.

1 Remove the capillary connection from the outlet of the secondary pump head. 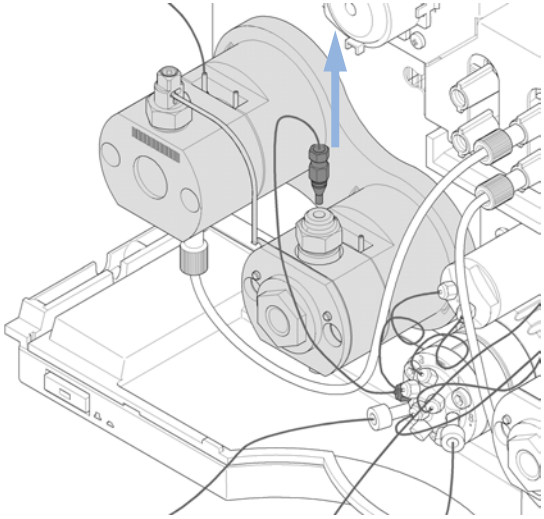	**2** Unscrew the tubing at the inlet valve. 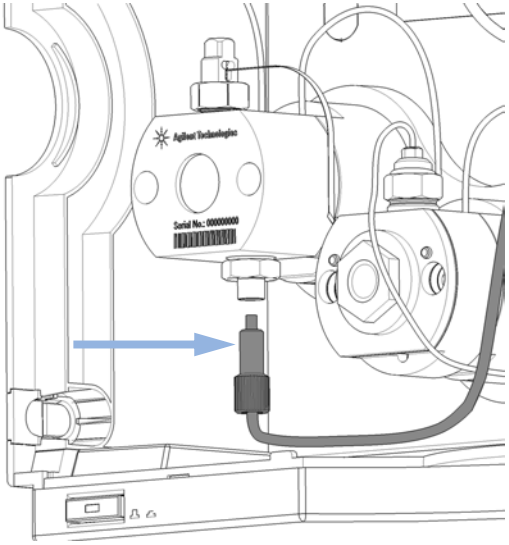

3 Attach a Luer lock syringe with adapter to the tubing and fill it with solvent.

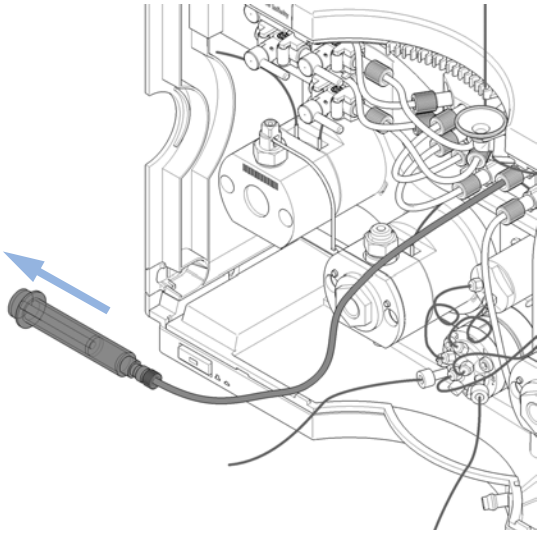

4 Reconnect tubing to inlet valve.

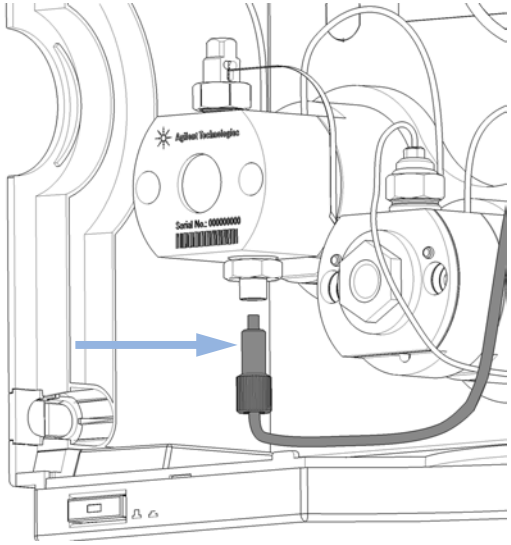

5 Unscrew tubing at degassing unit and attach the syringe to it.

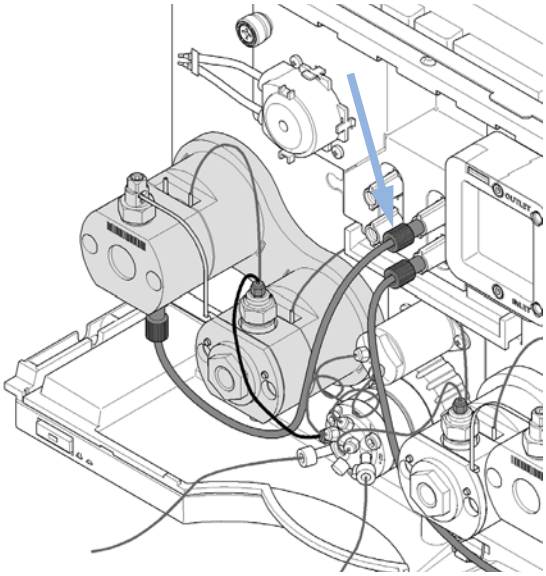

6 Push solvent with syringe until it comes out at the top of the High Pressure Filter Assembly.

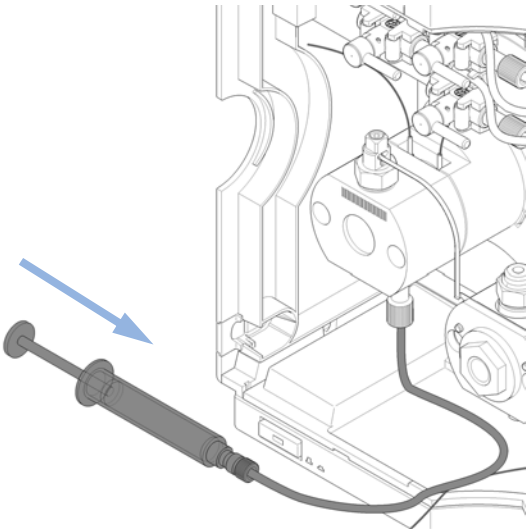

7 Detach the syringe and reconnect the tubing into the degassing unit. 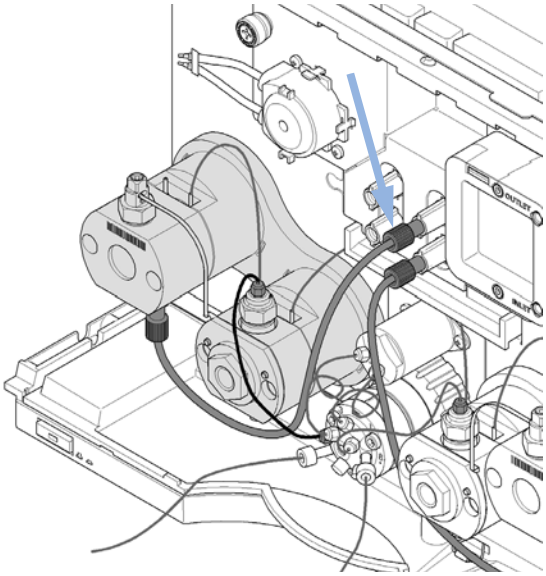	**8** Reinstall the capillary connection to the High Pressure Filter Assembly. 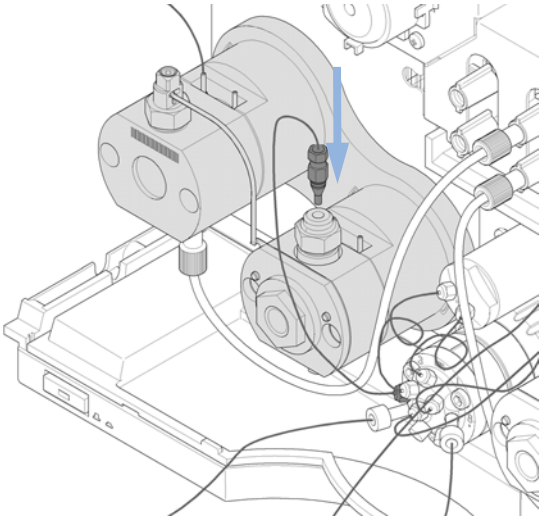
9 Purge the system to remove air.	

Replacing the Pump Heads

The Agilent 1290 Infinity Binary Pump has two pump assemblies for two solvent channels A and B which both consist of two pump drives and pump heads. The solvent enters each pump through the primary pump head, is transferred to the secondary pump head and leaves the outlet of the secondary pump head, which is connected to the pump valve.

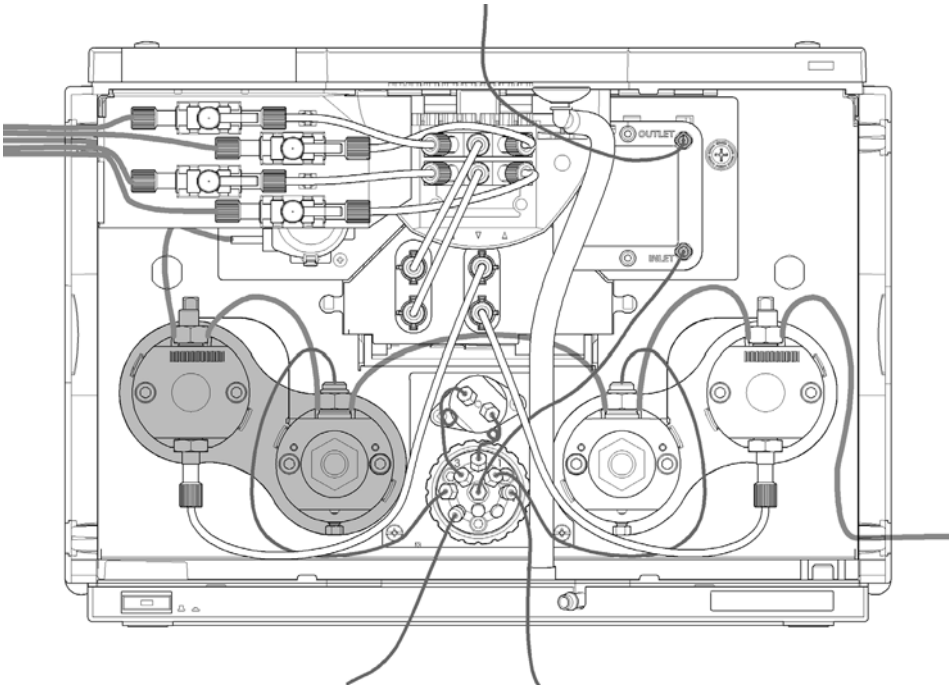

Figure 44 Pump head assembly (left)

When

In case of problems with the pump performance.

Tools required

- Torque wrench 2 – 25 Nm (p/n G4220-20012)
- 4 mm Hex bit (p/n G4220-20013)
- Adapter ¼ in square to hex (p/n G4220-20015)

Parts required

#	p/n	Description
1	G4220-60200	Pump Head Assembly Channel A (left) with Seal Wash Option
1	G4220-60210	Pump Head Assembly Channel B (right) with Seal Wash Option
1	G4220-60400	Pump Head Assembly Channel A (left) without Seal Wash Option
1	G4220-60410	Pump Head Assembly Channel B (right) without Seal Wash Option
1	G4220-69200	Pump Head Assembly Channel A (left) with Seal Wash Option (exchange part)
1	G4220-69210	Pump Head Assembly Channel B (right) with Seal Wash Option (exchange part)
1	G4220-69400	Pump Head Assembly Channel A (left) without Seal Wash Option (exchange part)
1	G4220-69410	Pump Head Assembly Channel B (right) without Seal Wash Option (exchange part)

NOTE

This procedure describes the replacement of the left pump head assembly. Similarly, the right pump head assembly can be replaced.

One pump head assembly consists of two pump heads, which are both removed at the same time.

CAUTION

Limitation of life time

The pump head assembly is an exchange part which cannot be reassembled with standard tools. Disassembling the pump head will strongly limit its life time.

→ Do not disassemble the pump head assembly.

CAUTION

Damage of connections

Disassembling the flow connection between the both pump heads of one pump head assembly (solvent channel) can damage the connection and cause leaks.

→ Do not disconnect the flow connection between the pump heads.

CAUTION

Damage of internal parts

→ Do not apply a strong force to the screws of the pump head.

→ Use a torque hex key for that purpose.

CAUTION

Damage of the pump piston

Removing pump heads in a position other than the maintenance position can damage the pump piston.

➔ Before switching off the pump, bring it to the maintenance position.

1 Do NOT switch off the pump. Use your service user interface, for example Lab Advisor for bringing the pump to its maintenance position. In Lab Advisor go to **Tools > Remove/Install Pump Head** and follow instructions given on the screen. **2** Close the shut-off valve of the respective pump channel.	**3** Remove the flow connection between the degassing unit and the primary pump head inlet. Remove the capillary connection at the top of the secondary pump head to the pump valve. DO NOT REMOVE the capillary connection between the pump heads marked by the red X. 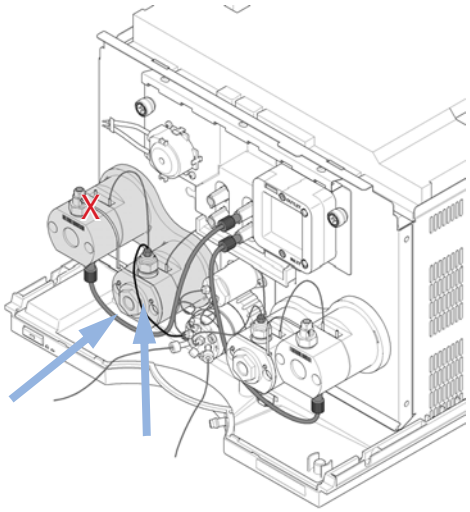

4 Open the 4 screws holding the pump heads. 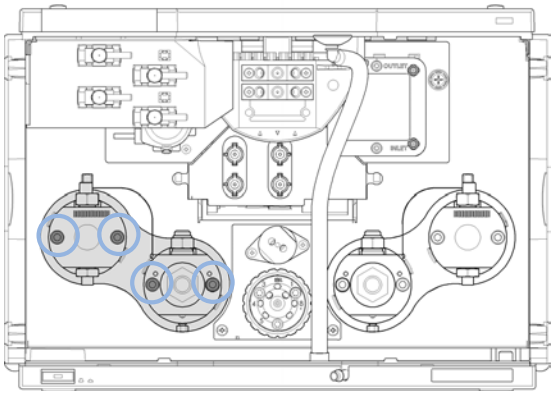	**NOTE** Open all screws step by step, not screw by screw.
5 Remove the complete pump head assembly by holding both heads and pulling it to the front. 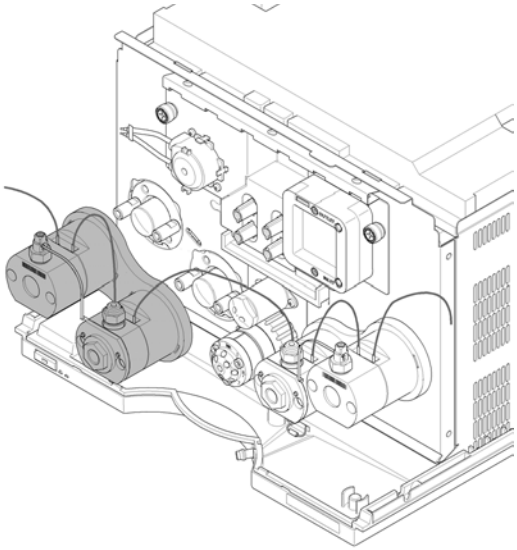	**NOTE** Do not further disassemble the pump head.

6 The pump head assembly is an exchange part which can be returned to Agilent. 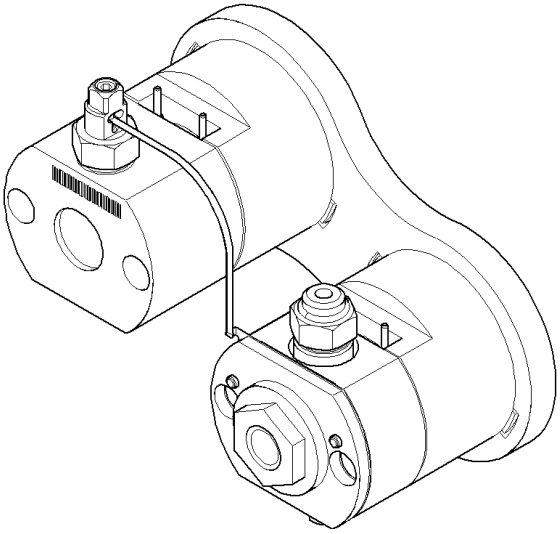	**7** Install the new pump head assembly by tightening the screws step by step. Apply 5 Nm using a torque hex key. 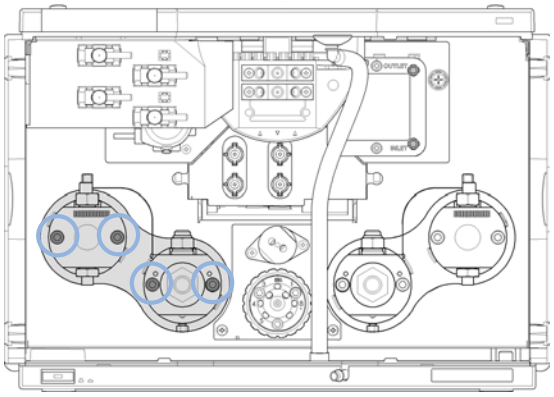

8 Install flow connections. • Connect the degassing unit outlet to the inlet of the primary pump head and the outlet of the secondary pump head to the inlet of the purge valve. • Channel A (left pump head assembly) is connected to port 4, channel B (right pump head assembly) to port 1. 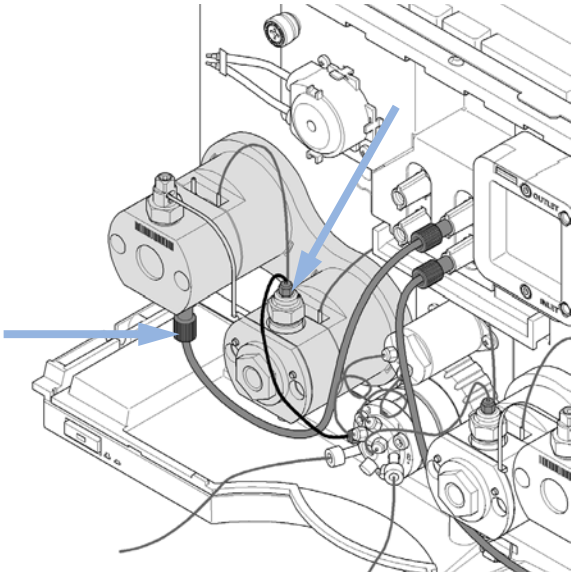	**9** After the complete reassembly of the module, the pump must be purged. For 10 min, apply a flow of 10 ml/min using solvents suitable for your application and a composition 50:50 for channels A and B, for example 50 % acetonitrile, 50 % water.

Disassembling the Pump Head

When If parts inside the pump head need to be replaced

Tools required 1/4 inch hex wrench

Parts required

#	p/n	Description
1	5023-0279	Pump head alignment tool
1	G4220-20012	Torque wrench 2 – 25 Nm
1	01018-23702	Insert tool
1	G4220-20013	4 mm Hex bit
1	G4220-20015	Adapter ¼ in square to hex

Preparations Remove the pump head assembly as described in "Replacing the Pump Heads" on page 177, steps 1-4.

NOTE This procedure describes replacements for the pump heads of channel A. Replacement for channel B can be done accordingly. The primary pump head does not have a heat exchanger. Seal wash parts are optional for both pump heads.

1 Open the hex screw at the top of the primary pump head, which fixes the connection capillary of the heat exchanger. Then lift up the capillary and remove it from the primary pump head.

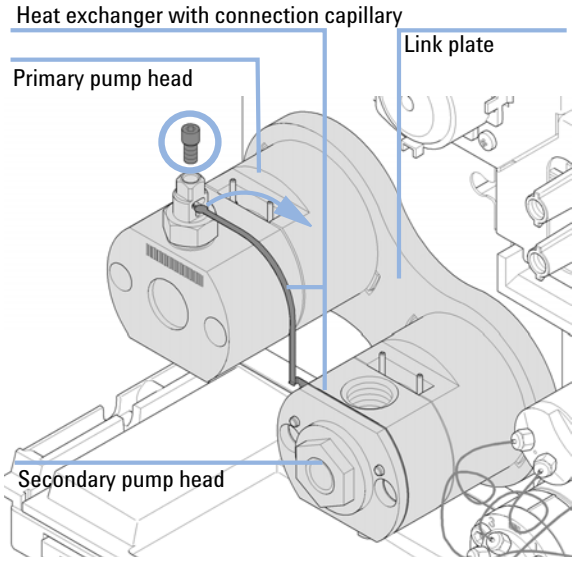

2 Remove both pump heads from the link plate by pushing the clips at the rear of the plate.

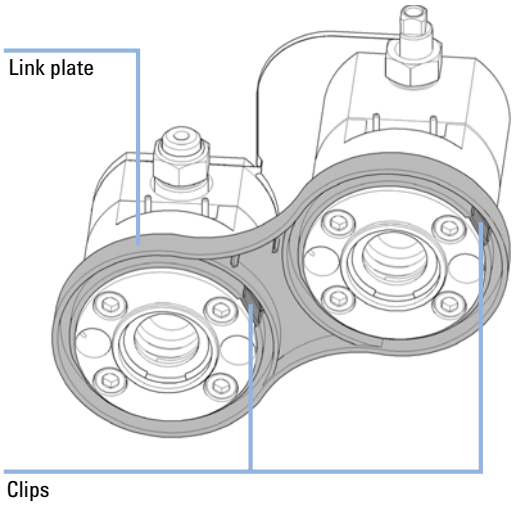

Assembling the Pump Head

When Before installing the pump head.

Parts required

#	p/n	Description
1	5023-0279	Pump head alignment tool
1	G4220-20012	Torque wrench 2 – 25 Nm
1	01018-23702	Insert tool
1	G4220-20013	4 mm Hex bit
1	G4220-20015	Adapter ¼ in square to hex

CAUTION

Limited life time of the pump head

Inserting the backup seal wrongly may limit the life time of the pump head.

➔ Please note the correct orientation of the backup seal.

CAUTION

Damage of the pump piston

The pump piston is very sensitive to shearing forces from the side.

➔ Use the plunger assy of the pump head alignment tool for the alignment procedure described below.

1 Insert the pump seal to the pump chamber housing.

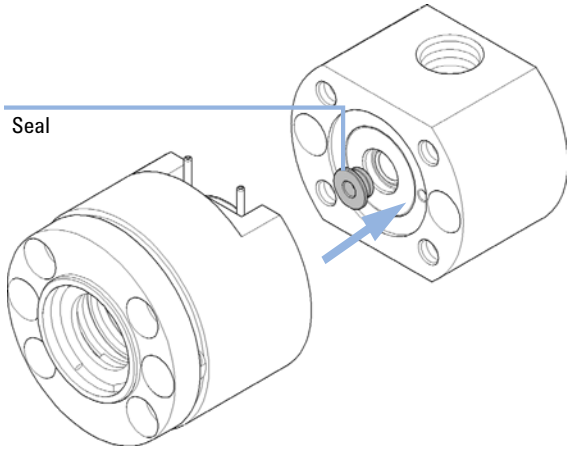

2 If the seal wash option is installed, use the insert tool for inserting the wash seal to the support ring.

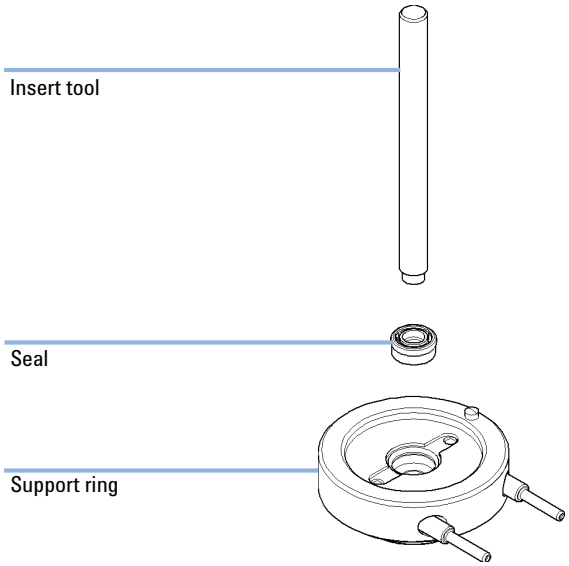

3 If the backup seal has been removed from the seal holder, insert it in the correct orientation as shown below. Please ensure that the cut end faces the seal holder.

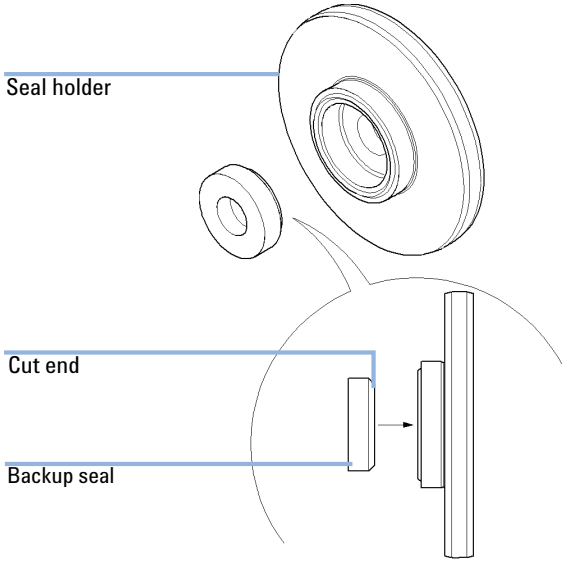

4 If the seal wash option is installed, put the gasket into the support ring and insert the seal holder.

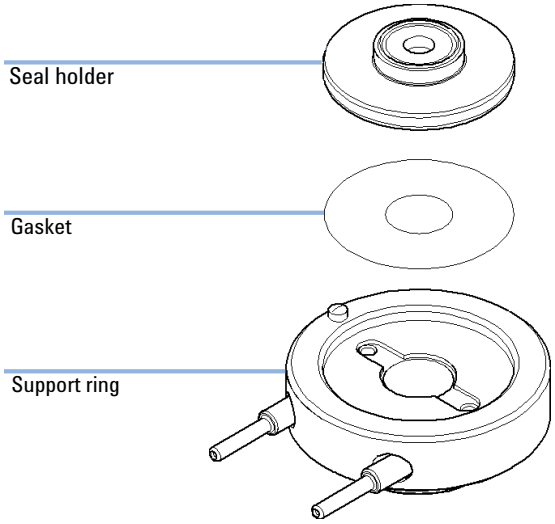

5 Insert the support ring and pump head ferrules into the piston housing. Assemble the pump head by putting the pump chamber housing on top of the support ring.

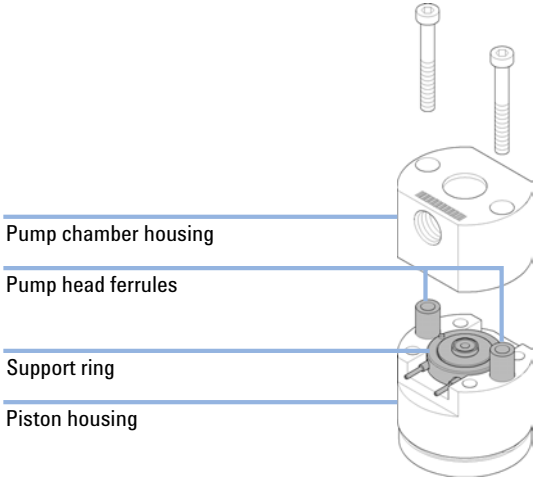

6 Loosely close the 4 screws at the rear of the pump head. The screws will be fixed tightly later. Then insert the plunger assy of the pump head alignment tool.

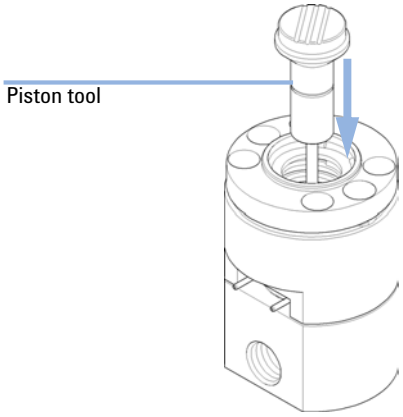

7 Insert the primary or secondary pump head to the pump head alignment tool. There are openings for the seal wash support ring and heat exchanger of the secondary pump head.

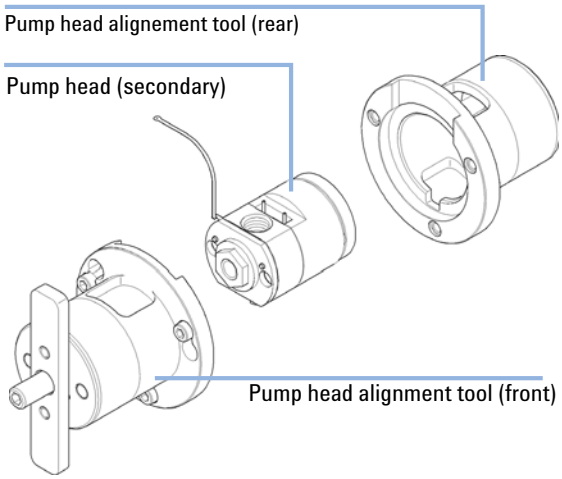

8 Close the tool by closing the 3 screws at the connection ring.

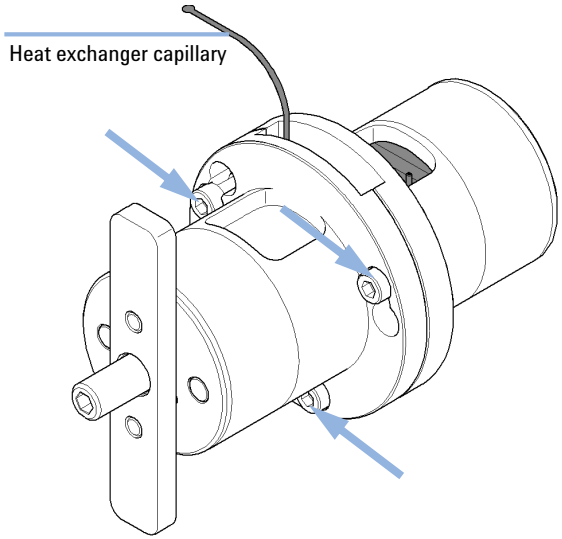

9 Using a torque key, set 5 Nm and close the screw at the front of the pump head alignment tool. Then close the 4 screws at the rear of the pump head.

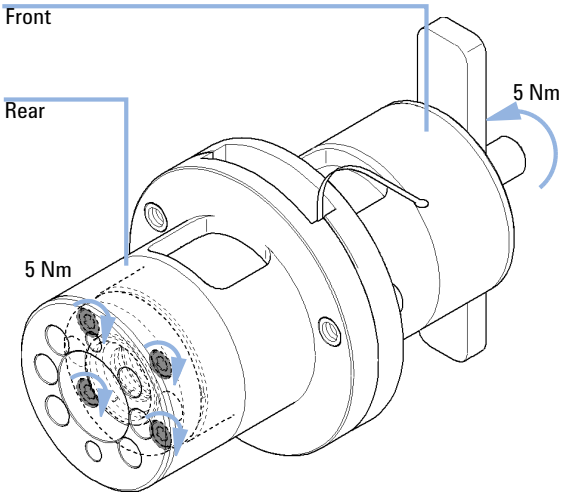

NOTE

This procedure will align pump head parts to their correct positions and close the pump head tightly.

10 Open the 3 screws which have closed the pump head alignment tool and take out the aligned pump head.

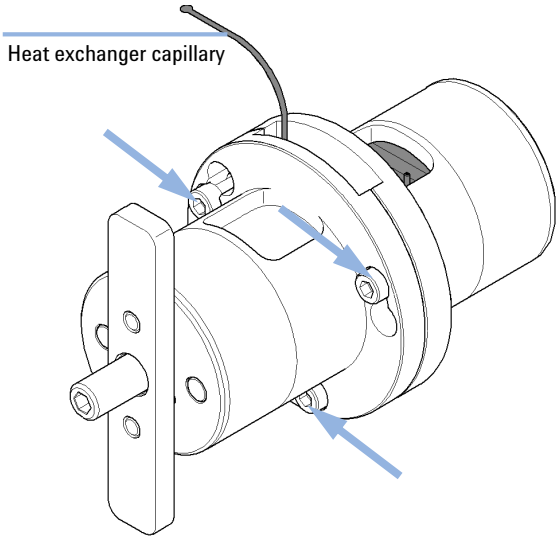

11 For the primary pump head, install the inlet valve and outlet valve.

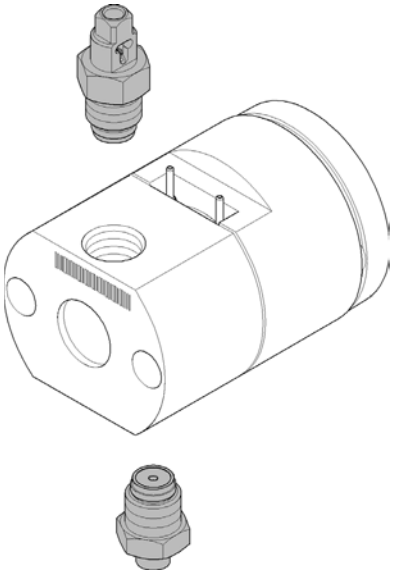

12 For the secondary pump head, assemble and install the high pressure filter assembly as shown.

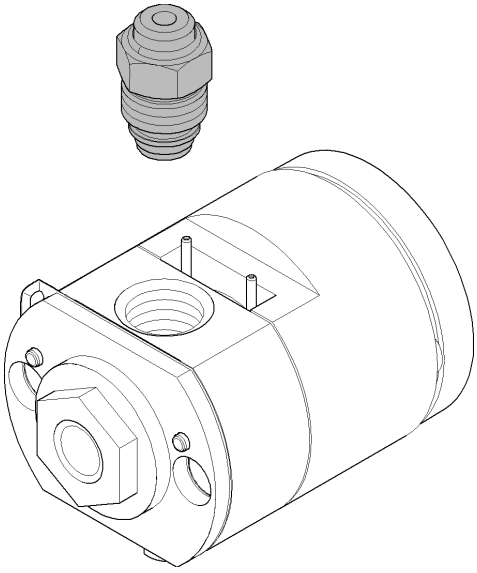

13 Remove plunger assy.

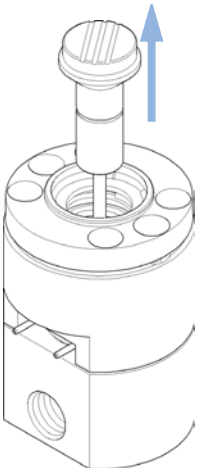

14 Insert pump piston 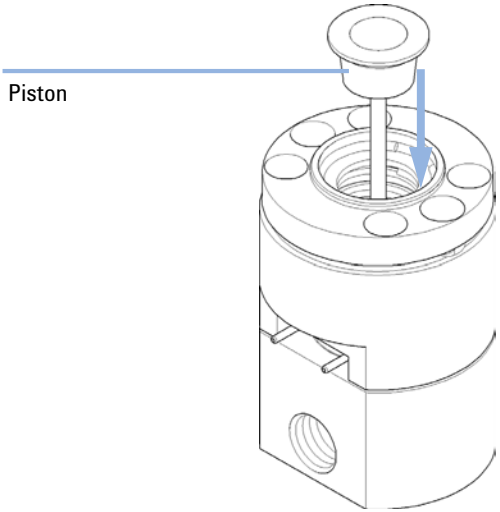 	**15** Insert both pump heads to the link plate and make sure that the clips snap in that fix the pump heads. 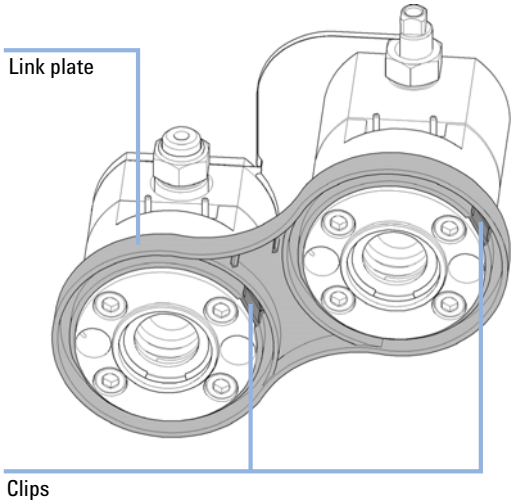
16 Insert the heat exchanger capillary into the outlet of the primary pump head. Using a torque key, set 3 Nm and close the hex screw at the top of the outlet. 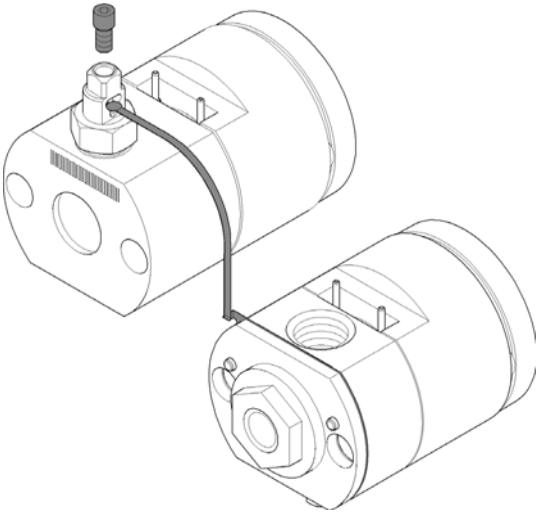	**17** Install the pump head assembly and install flow connections as described in "Replacing the Pump Heads" on page 177, steps 6 to 8.

Replacing the Purge Valve Head

When In case of problems with the purge valve

Parts required

#	p/n	Description
1	5067-4119	Purge valve head
1	5067-4655	Capillaries to pump head assemblies channel A and B (2x)
1	G4220-87000	Capillary SST Valve to Jet Weaver 300 mm x 0.17 mm I.D.
1	5067-4656	Capillaries to pressure sensor (2x)

Preparations Remove all capillary connections to the purge valve

CAUTION

Invalid valve tag

Not switching off the pump may result in an invalid valve tag such that the valve cannot be controlled correctly.

➔ Switch off the pump first.

CAUTION

Bias measurement results

The valve drive contains sensitive optical parts. Pollution of these parts can impair the accurate selection of valve ports and therefore bias measurement results.

➔ Protect the optical parts from dust and other pollutions.

1 Remove all capillary connections. Then unscrew the black union nut and remove the head of the purge valve by pulling it to the front. 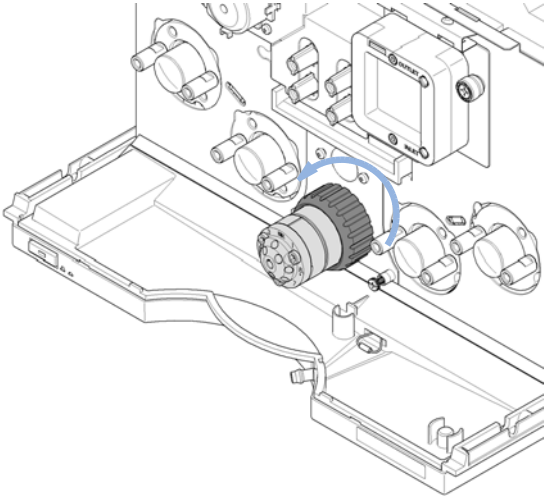	**2** Put the new valve head onto the valve drive such that the lobe fits to the groove. Screw the valve head onto the valve drive using the union nut. 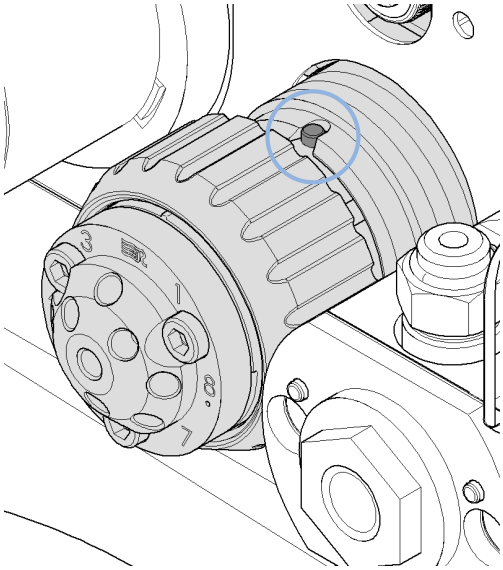

3 Install all flow connections:

- Port 1 is connected to the outlet of the secondary pump head of channel B
- Port 2 is connected to the outlet of the pressure sensor
- Port 3 is connected to the inlet of the pressure sensor
- Port 4 is connected the outlet of the secondary pump head of channel A
- Ports 5 and 6 are connected to waste capillaries
- The central port is connected to the Jet Weaver inlet

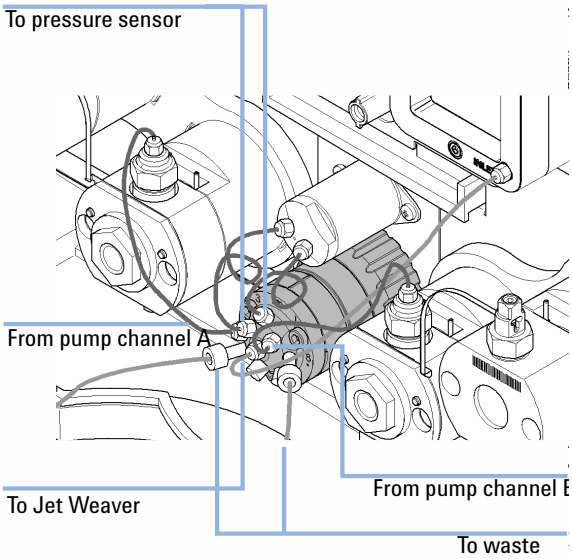

Replacing Parts of the High Pressure Filter Assembly

When

For removing blockages and leaks in the high pressure filter assembly. The filter frit in the outlet valve should be replaced regularly depending on the system usage. Other parts are covered by the Agilent Preventive Maintenance (PM) Service.

Tools required

- Torque wrench 2 – 25 Nm (p/n G4220-20012)
- Adapter ¼ in square to hex (p/n G4220-20015)
- 14 mm Hex bit

Parts required

#	p/n	Description
1	01018-22707	PTFE frit (pack of 5)
1	5001-3707	Gold seal, outlet
1	5042-1346	Cap

NOTE

This procedure describes replacements for channel A (left pump head assembly) and can be applied accordingly to channel B. In both cases, maintenance is done only at the secondary pump head outlet, which hosts the filter frit.

NOTE

When replacing a PTFE frit, consider replacing the gold seal and cap as well in order to prevent leaks.

CAUTION

Leakage or damaged connection

Opening the outlet of the primary pump head may cause leaks or damage the connection between the pump heads.

➔ Do not open the outlet of the primary pump head.

1 Remove the capillary connection from the outlet of the secondary pump head.

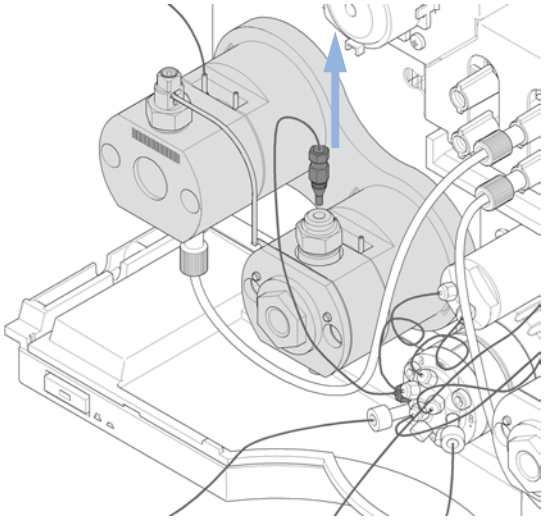

2 Use a 14 mm hex wrench for opening the filter assembly of the secondary pump head

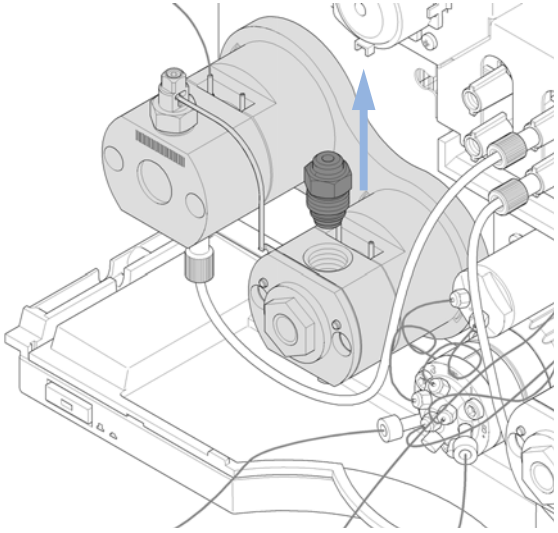

3 Replace the filter frit, gold seal and cap as desired. Please note the correct orientation of the filter frit.

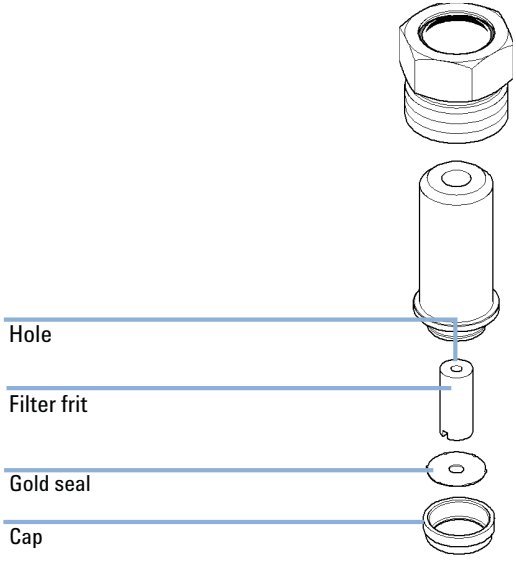

4 Re-install the filter assembly with a 14 mm hex wrench.

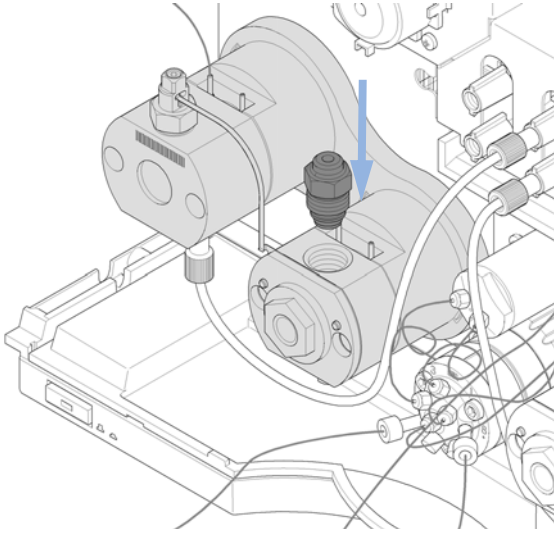

Installing the Valve Rail Kit

When This rail is needed for the installation of external valves

Tools required Pozidrive screwdriver #1

Parts required

#	p/n	Description
1	5067-4634	Valve Rail Kit

NOTE The rail can be installed on the left or right side of the pump. This procedure describes the installation on the left side and applies similarly to the right side.

1 The valve rail is fixed to the pump cover by 4 screws. The position of the lower screws is marked on the module cover. First tighten these screws, and then tighten the upper screws.

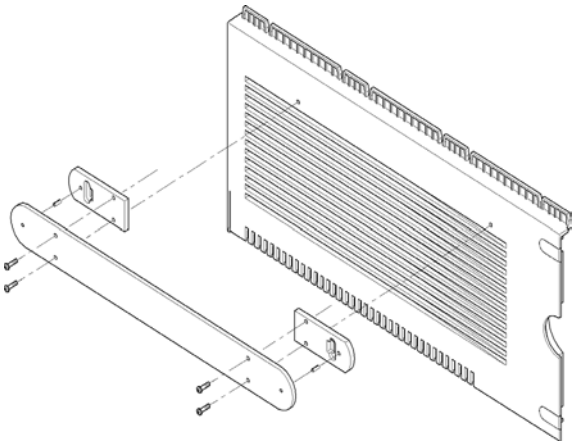

Replacing the Main Power Fuses

When

If the main power LED is off while the main power button is pressed (see "Status indicators" on page 121).

Tools required

Flat head screwdriver

Parts required

#	p/n	Description
1	2110-1004	Fuse 10 A t (2x)

Preparations

Switch off the instrument and unplug the main power cable.

WARNING

Fire hazard

Using wrong fuses can result in fire hazard.

- For continued protection against fire hazard, replace line fuses only with the same type and ratings (F1-F4 Fuse 6.3 A t (4x) (p/n 2110-1018), F5 Fuse 3.15 A250 V (p/n 2110-1417)).
- Only use the fuses specified for this instrument. The use of other fuses or materials is prohibited.

NOTE

There are more fuses inside the instrument.

If replacing the main power fuse does not resolve the issue, please contact your Agilent service representative.

1 Use a screwdriver for removing the main fuse carrier from the compartment next to the main power plug. Remove the fuse from the carrier. 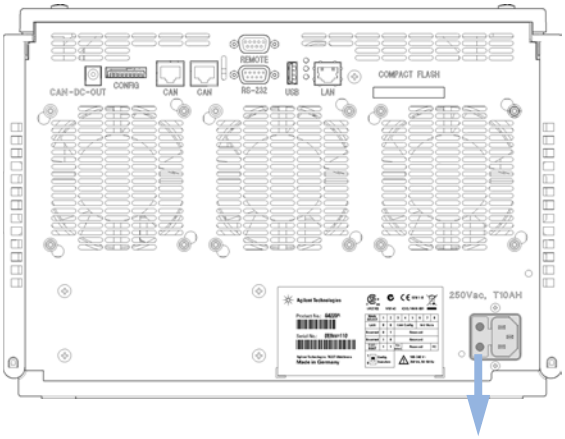	**2** Install the new fuse 10A to the carrier and insert the carrier to the fuse compartment. 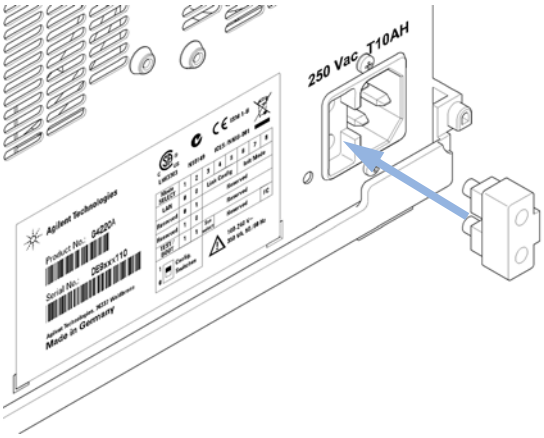

Replacing Module Firmware

When

The installation of newer firmware might be necessary
- if a newer version solves problems of older versions or
- to keep all systems on the same (validated) revision.

The installation of older firmware might be necessary
- to keep all systems on the same (validated) revision or
- if a new module with newer firmware is added to a system or
- if third part control software requires a special version.

Tools required

- LAN/RS-232 Firmware Update Tool or
- Agilent Lab Advisor software
- Instant Pilot G4208A (only if supported by module)

Parts required

#	Description
1	Firmware, tools and documentation from Agilent web site

Preparations

Read update documentation provided with the Firmware Update Tool.

To upgrade/downgrade the module's firmware carry out the following steps:

1 Download the required module firmware, the latest LAN/RS-232 FW Update Tool and the documentation from the Agilent web.
   - http://www.chem.agilent.com/scripts/cag_firmware.asp.

2 To load the firmware into the module follow the instructions in the documentation.

Module Specific Information

There is no specific information for this module.

Preparing the Pump Module for Transport

When If the module shall be transported or shipped.

Parts required

#	p/n	Description
1	9301-0411	Syringe; Plastic
1	9301-1337	Syringe adapter
1	G4220-44000	Protective Foam

Preparations Flush both solvent channels with isopropanol.

CAUTION

Mechanical damage

→ For shipping the module, insert the Protective Foam to protected the module from mechanical damage.

→ Be careful not to damage tubing or capillary connections while inserting the module in the Protective Foam.

1 Remove solvent inlets from solvent reservoirs. Disconnect the solvent tubing from the inlet of primary pump heads for both solvent channels. Use a syringe for removing liquid from the solvent tubings between solvent

reservoir, shutoff valve panel, solvent selection valve, degassing unit and pump inlets. Switch the solvent selection valve if applicable.

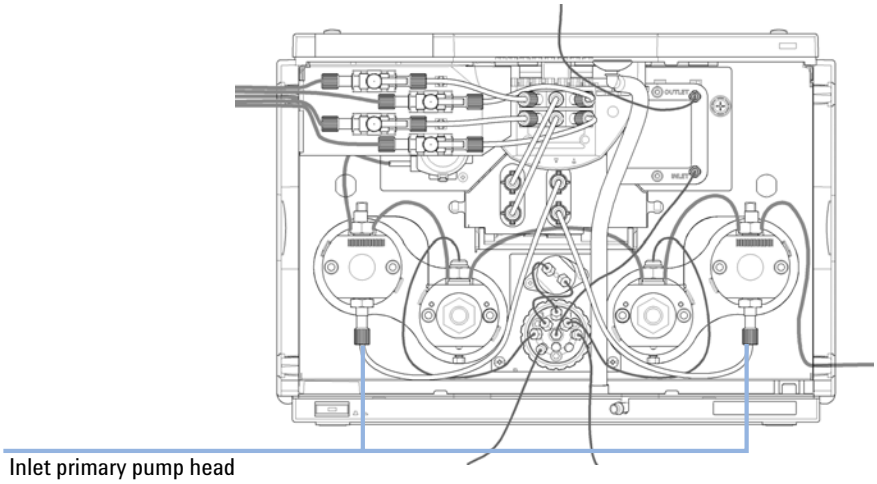

2 Remove tubing and capillary connections to other modules and the solvent cabinet. Remove tubing plugs.

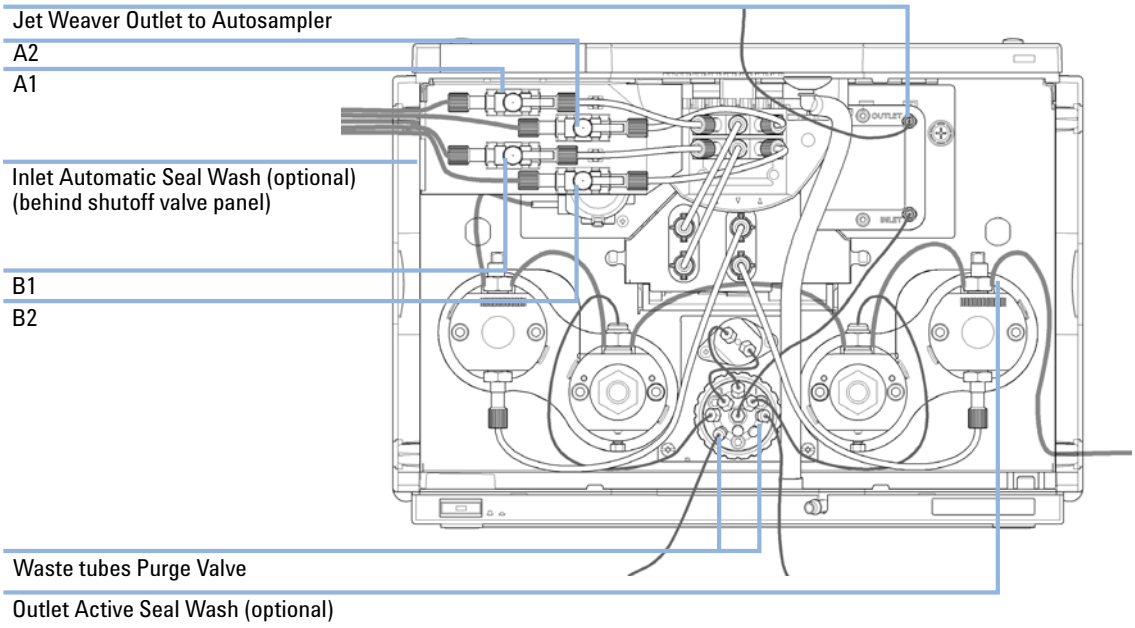

3 Remove the shutoff valve panel by pulling it downwards

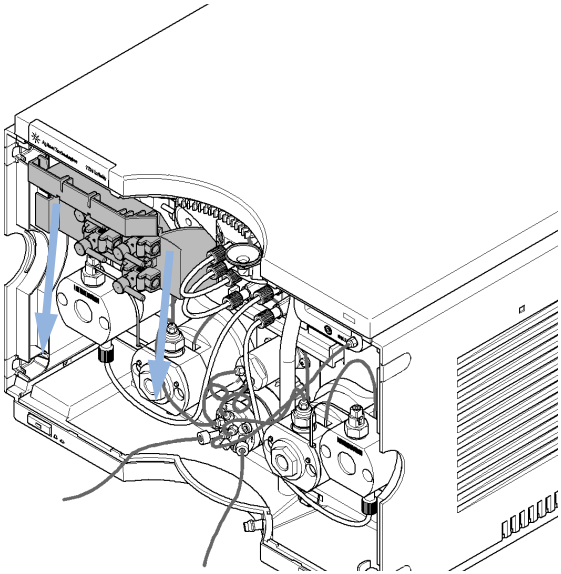

4 You may keep internal tubing and capillary connections.

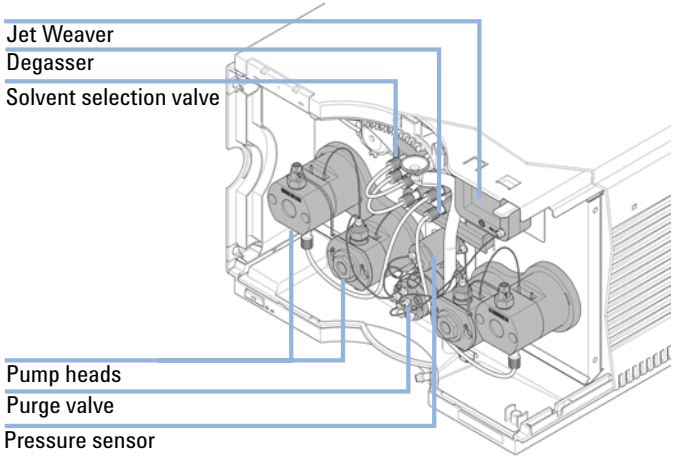

5 Remove cable connections to other modules. Remove the module from the stack.

6 Carefully insert the Protective Foam to the front part of the instrument. Do not damage any tubing or capillary connections.

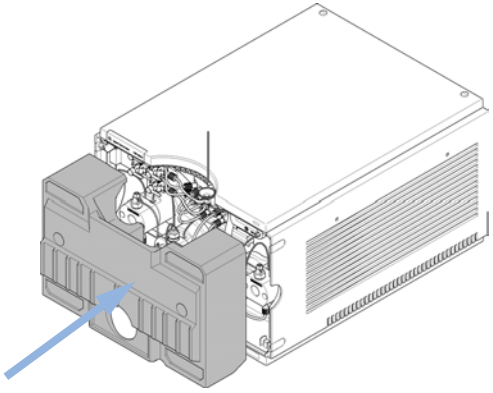

7 Close the front cover.

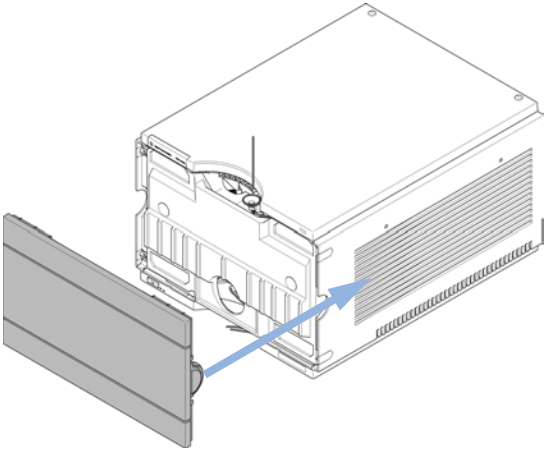

8 For transport or shipment, put the module and accessory kit to the original shipment box.

11
Parts and Materials for Maintenance

This chapter provides information on parts for maintenance.

Overview of Maintenance Parts

p/n	Description
G4280-60029	Solvent selection valve
G4220-60006	Jet Weaver
G4220-60001	Pressure sensor
G4220-60200	Pump Head Assembly Channel A (left) with Seal Wash Option
G4220-60210	Pump Head Assembly Channel B (right) with Seal Wash Option
G4220-60400	Pump Head Assembly Channel A (left) without Seal Wash Option
G4220-60410	Pump Head Assembly Channel B (right) without Seal Wash Option

Capillaries

p/n	Description
5067-4655	Capillaries to pump head assemblies channel A and B (2x)
G4220-87000	Capillary SST Valve to Jet Weaver 300 mm x 0.17 mm I.D.
5067-4656	Capillaries to pressure sensor (2x)

Seal Wash Option

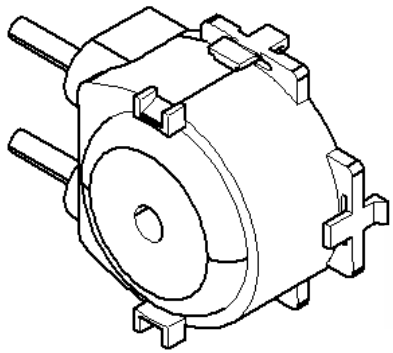

Figure 45 Seal wash pump

p/n	Description
5042-8507	Seal wash pump cartridge
0890-1764	Tubing, wash option

New Topic

Summary for this topic

Under construction

p/n	Description
5067-1531	Solvent Cabinet Kit 1290 of Infinity Binary Pump, complete
5065-9981	Solvent cabinet, including all plastic parts
9301-1420	Solvent bottle, transparent
9301-1450	Solvent bottle, amber
5042-9967	Tubing clip (set of 5 clips)
G4220-60007	Bottle Head Assembly
G4220-60035	Tubing kit 140 mm SSV to shutoff valve or degassing unit (2 tubes)
5067-4661	Tubing kit 270 mm for connection of degassing unit to inlet valve (set of 2 tubes)
G4220-40004	Shutoff valve panel
5067-4124	Shutoff valve

Pump Head Assembly Parts

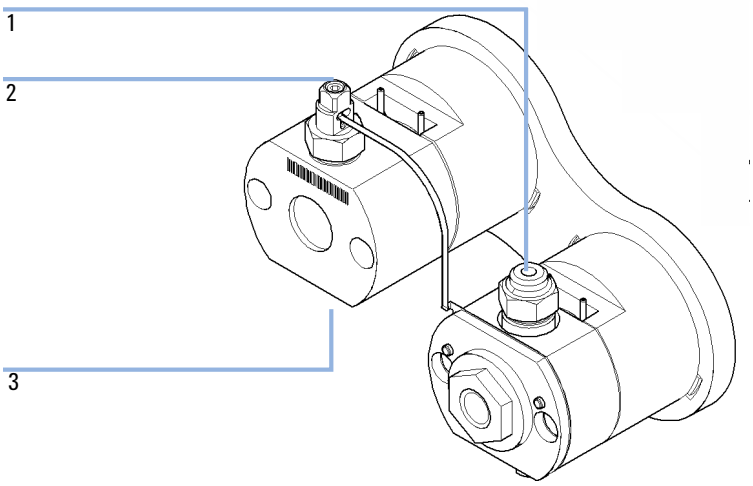

Figure 46 Pump head assembly parts

Item	p/n	Description
1	G4220-60026	High pressure filter assembly (secondary pump head)
2	G4220-60028	Outlet valve (primary pump head)
3	G4220-60022	Inlet valve (primary pump head)

Pump Head Parts

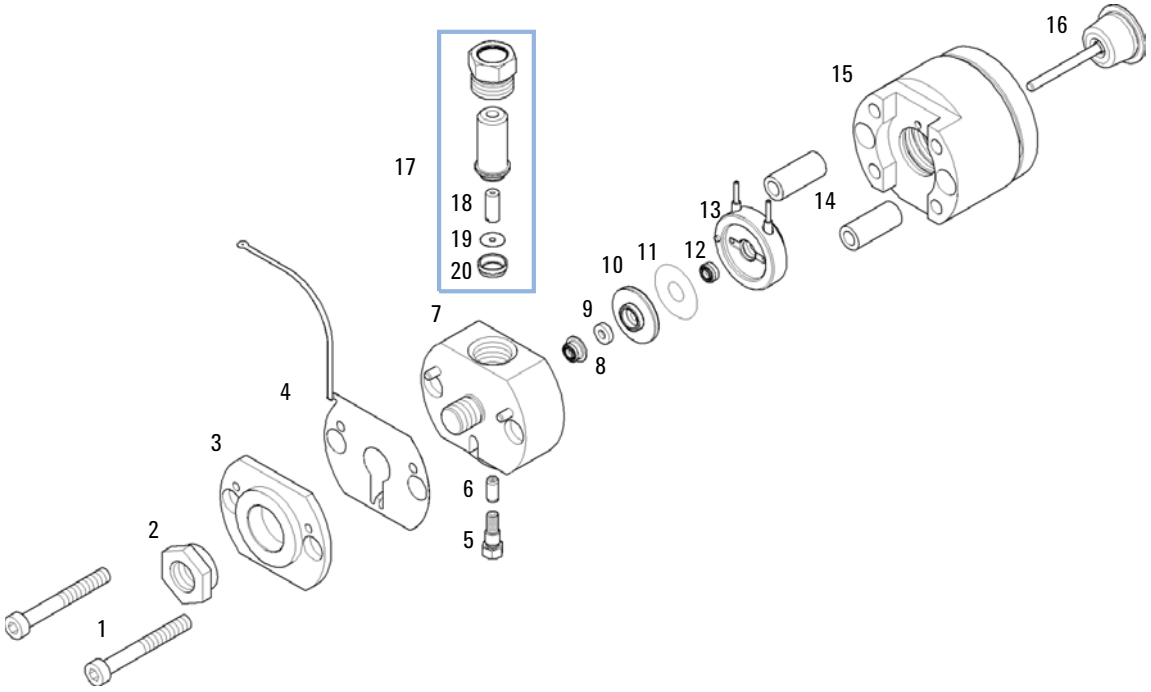

Figure 47 Pump head parts

Item	p/n	Description
1	0515-1218	Screw M5, 40 mm long
2	G4220-20003	Pump Head Screw
3		Pump Head Front Plate (order pump head)
4	G4220-81003	Heat Exchanger Channel A (secondary pump head only)
	G4220-81002	Heat Exchanger Channel B (secondary pump head only)
5	0515-5237	Heat Exchanger Screw

Item	p/n	Description
6	G4220-20001	Spacer Fitting
7		Pump Chamber Housing (order pump head)
8	0905-1719	Pump Seal PE, yellow (pack of 2)
9	G4220-24013	Backup Ring for Seal Holder
10	G4220-26210	Seal Holder
11	01018-07102	Gasket (Seal wash)
12	0905-1718	Backup Seal PE (Seal Wash)
13	G4220-63010	Support Ring (Seal Wash)
14		Pump Head Ferrules (order pump head)
15		Piston Housing (order pump head)
16	5067-4603	Piston 1290 Infinity Binary Pump
17	G4280-60026	High Pressure Filter Assembly (secondary pump head)
18	01018-22707	PTFE frit (pack of 5)
19	5001-3707	Gold seal, outlet
20	5042-1346	Cap
	G4220-63015	Support Ring without Seal Wash

Purge Valve

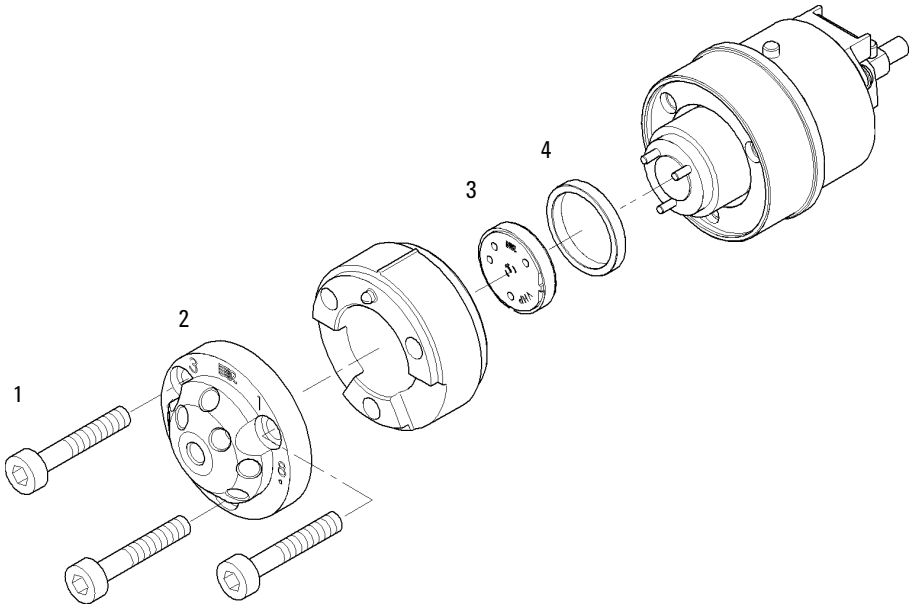

Figure 48 Purge valve parts

Item	p/n	Description
	5067-4119	Purge valve head
1	1535-4857	Stator screws
2	5068-0004	Purge Valve Stator
3	5068-0005	Purge Valve Rotor Seal, 1200 bar
4	1535-4045	Bearing Ring, (Qty 1, replacement)

Cover Parts

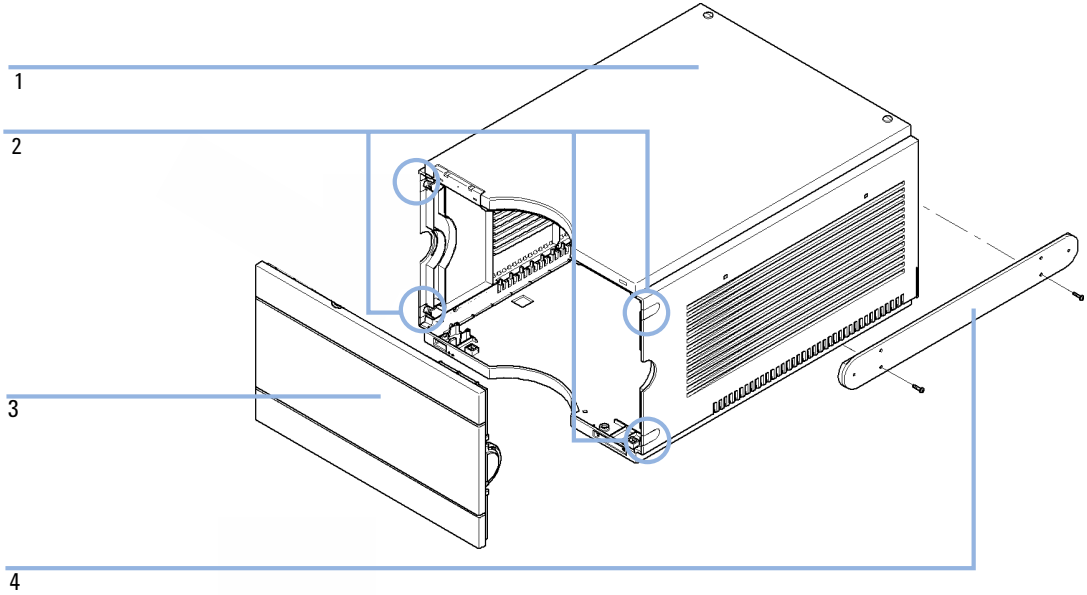

Figure 49 Cover Parts

Item	p/n	Description
1	5067-4613	Cabinet Kit (Side Covers left/right, Top Cover, Tubing Plug, Base Cover and Leak Seal)
2	5042-9949	Tubing Plug, Plastic
	5042-9972	Tubing plug, rubber
3	5067-4612	Front Cover 1290 Infinity Binary Pump
4	5067-4634	Valve Rail Kit

Leak Parts

Figure 50 Leak funnel

p/n	Description
5041-8388	Leak funnel

Fuses

p/n	Description
2110-1004	Fuse 10 A t (2x)

Accessory Kit

p/n	Description
G4220-68705	Accessory kit
5042-9974	Tubing Flex (1.5 m)
8710-0510	1/4 inch X 5/16 inch wrench
8710-1924	Wrench open 14 mm
5023-0240	Hex driver, ¼", slitted
8710-2392	Hex key 4 mm15 cm long T-handle
9301-0411	Syringe; Plastic
9301-1337	Syringe adapter
5067-4657	SST Capillary 300 x 0.17 mm, Pump to Autosampler
5067-4658	SST Capillary 450 x 0.17 mm, Pump to Thermostatted Autosampler
0100-1710	Mounting Tool for Tubing Connections
G4220-67000	Waste tubes
8710-1534	Wrench, 4 mm both ends, open end
0890-1764	Tubing, wash option
5181-1519	CAN cable, Agilent module to module, 1 m
01018-22707	PTFE frit (pack of 5)
01018-23702	Insert tool
5042-9972	Tubing plug, rubber

Others

p/n	Description
G4220-20012	Torque wrench 2 – 25 Nm
G4220-20013	4 mm Hex bit
G4220-20014	2.5 mm Hex Bit
G4220-20015	Adapter ¼ in square to hex
G4220-44000	Protective Foam

12
Identifying Cables

This chapter summarizes information on all cables.

Cable Overview

NOTE Never use cables other than the ones supplied by Agilent Technologies to ensure proper functionality and compliance with safety or EMC regulations.

Analog cables

p/n	Description
35900-60750	Agilent module to 3394/6 integrators
35900-60750	Agilent 35900A A/D converter
01046-60105	Analog cable (BNC to general purpose, spade lugs)

Remote cables

p/n	Description
03394-60600	Agilent module to 3396A Series I integrators
	3396 Series II / 3395A integrator, see details in section "Remote Cables" on page 224
03396-61010	Agilent module to 3396 Series III / 3395B integrators
5061-3378	Agilent module to Agilent 35900 A/D converters (or HP 1050/1046A/1049A)
01046-60201	Agilent module to general purpose

BCD cables

p/n	Description
03396-60560	Agilent module to 3396 integrators
G1351-81600	Agilent module to general purpose

CAN cables

p/n	Description
5181-1516	CAN cable, Agilent module to module, 0.5 m
5181-1519	CAN cable, Agilent module to module, 1 m

LAN cables

p/n	Description
5023-0203	Cross-over network cable, shielded, 3 m (for point to point connection)
5023-0202	Twisted pair network cable, shielded, 7 m (for point to point connection)

RS-232 cables

p/n	Description
G1530-60600	RS-232 cable, 2 m
RS232-61600	RS-232 cable, 2.5 m Instrument to PC, 9-to-9 pin (female). This cable has special pin-out, and is not compatible with connecting printers and plotters. It's also called "Null Modem Cable" with full handshaking where the wiring is made between pins 1-1, 2-3, 3-2, 4-6, 5-5, 6-4, 7-8, 8-7, 9-9.
5181-1561	RS-232 cable, 8 m

Analog cables

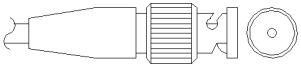

One end of these cables provides a BNC connector to be connected to Agilent modules. The other end depends on the instrument to which connection is being made.

Agilent Module to 3394/6 Integrators

p/n 35900-60750	Pin 3394/6	Pin Agilent module	Signal Name
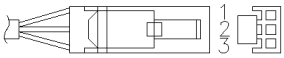	1		Not connected
	2	Shield	Analog -
	3	Center	Analog +

Agilent Module to BNC Connector

p/n 8120-1840	Pin BNC	Pin Agilent module	Signal Name
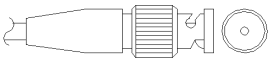	Shield	Shield	Analog -
	Center	Center	Analog +

Agilent Module to General Purpose

p/n 01046-60105	Pin 3394/6	Pin Agilent module	Signal Name
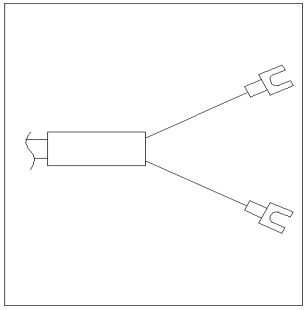	1		Not connected
	2	Black	Analog -
	3	Red	Analog +

Remote Cables

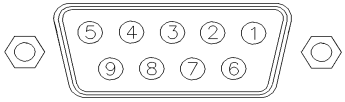

One end of these cables provides a Agilent Technologies APG (Analytical Products Group) remote connector to be connected to Agilent modules. The other end depends on the instrument to be connected to.

Agilent Module to 3396A Integrators

p/n 03394-60600	Pin 3394	Pin Agilent module	Signal Name	Active (TTL)
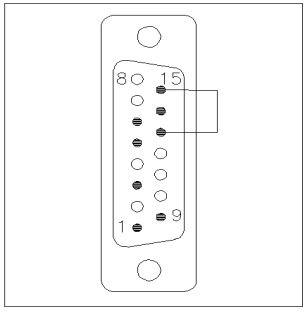	9	1 - White	Digital ground	
	NC	2 - Brown	Prepare run	Low
	3	3 - Gray	Start	Low
	NC	4 - Blue	Shut down	Low
	NC	5 - Pink	Not connected	
	NC	6 - Yellow	Power on	High
	5,14	7 - Red	Ready	High
	1	8 - Green	Stop	Low
	NC	9 - Black	Start request	Low
	13, 15		Not connected	

Agilent Module to 3396 Series II / 3395A Integrators

Use the cable Agilent module to 3396A Series I integrators (p/n 03394-60600) and cut pin #5 on the integrator side. Otherwise the integrator prints START; not ready.

Agilent Module to 3396 Series III / 3395B Integrators

p/n 03396-61010	Pin 33XX	Pin Agilent module	Signal Name	Active (TTL)
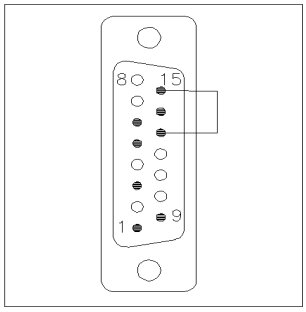	9	1 - White	Digital ground	
	NC	2 - Brown	Prepare run	Low
	3	3 - Gray	Start	Low
	NC	4 - Blue	Shut down	Low
	NC	5 - Pink	Not connected	
	NC	6 - Yellow	Power on	High
	14	7 - Red	Ready	High
	4	8 - Green	Stop	Low
	NC	9 - Black	Start request	Low
	13, 15		Not connected	

Agilent Module to Agilent 35900 A/D Converters

p/n 5061-3378	Pin 35900 A/D	Pin Agilent module	Signal Name	Active (TTL)
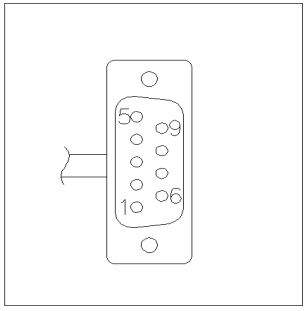	1 - White	1 - White	Digital ground	
	2 - Brown	2 - Brown	Prepare run	Low
	3 - Gray	3 - Gray	Start	Low
	4 - Blue	4 - Blue	Shut down	Low
	5 - Pink	5 - Pink	Not connected	
	6 - Yellow	6 - Yellow	Power on	High
	7 - Red	7 - Red	Ready	High
	8 - Green	8 - Green	Stop	Low
	9 - Black	9 - Black	Start request	Low

Agilent Module to General Purpose

p/n 01046-60201	Pin Universal	Pin Agilent module	Signal Name	Active (TTL)
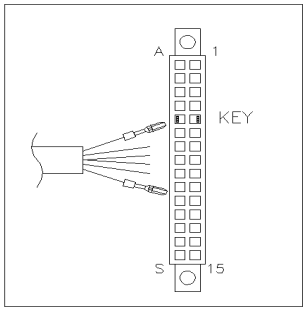		1 - White	Digital ground	
		2 - Brown	Prepare run	Low
		3 - Gray	Start	Low
		4 - Blue	Shut down	Low
		5 - Pink	Not connected	
		6 - Yellow	Power on	High
		7 - Red	Ready	High
		8 - Green	Stop	Low
		9 - Black	Start request	Low

BCD Cables

One end of these cables provides a 15-pin BCD connector to be connected to the Agilent modules. The other end depends on the instrument to be connected to

Agilent Module to General Purpose

p/n G1351-81600	Wire Color	Pin Agilent module	Signal Name	BCD Digit
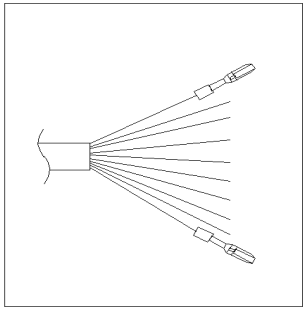	Green	1	BCD 5	20
	Violet	2	BCD 7	80
	Blue	3	BCD 6	40
	Yellow	4	BCD 4	10
	Black	5	BCD 0	1
	Orange	6	BCD 3	8
	Red	7	BCD 2	4
	Brown	8	BCD 1	2
	Gray	9	Digital ground	Gray
	Gray/pink	10	BCD 11	800
	Red/blue	11	BCD 10	400
	White/green	12	BCD 9	200
	Brown/green	13	BCD 8	100
	not connected	14		
	not connected	15	+ 5 V	Low

Agilent Module to 3396 Integrators

p/n 03396-60560	Pin 3396	Pin Agilent module	Signal Name	BCD Digit
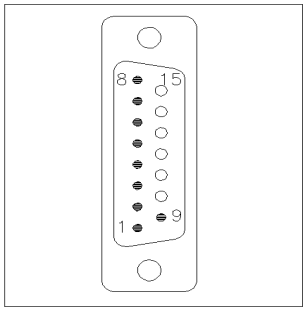	1	1	BCD 5	20
	2	2	BCD 7	80
	3	3	BCD 6	40
	4	4	BCD 4	10
	5	5	BCD0	1
	6	6	BCD 3	8
	7	7	BCD 2	4
	8	8	BCD 1	2
	9	9	Digital ground	
	NC	15	+ 5 V	Low

CAN/LAN Cable

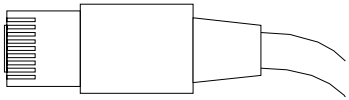

Both ends of this cable provide a modular plug to be connected to Agilent modules CAN or LAN connectors.

CAN Cables

p/n	Description
5181-1516	CAN cable, Agilent module to module, 0.5 m
5181-1519	CAN cable, Agilent module to module, 1 m

LAN Cables

p/n	Description
5023-0203	Cross-over network cable, shielded, 3 m (for point to point connection)
5023-0202	Twisted pair network cable, shielded, 7 m (for point to point connection)

RS-232 Cable Kit

p/n	Description
G1530-60600	RS-232 cable, 2 m
RS232-61600	RS-232 cable, 2.5 m Instrument to PC, 9-to-9 pin (female). This cable has special pin-out, and is not compatible with connecting printers and plotters. It's also called "Null Modem Cable" with full handshaking where the wiring is made between pins 1-1, 2-3, 3-2, 4-6, 5-5, 6-4, 7-8, 8-7, 9-9.
5181-1561	RS-232 cable, 8 m

Agilent 1200 Module to Printer

p/n	Description
5181-1529	Cable Printer Serial & Parallel, is a SUB-D 9 pin female vs. Centronics connector on the other end (NOT FOR FW UPDATE). For use with G1323 Control Module.

13
Appendix

This chapter provides addition information on safety, legal and web.

General Safety Information

Safety Symbols

Table 22 Safety Symbols

Symbol	Description
	The apparatus is marked with this symbol when the user should refer to the instruction manual in order to protect risk of harm to the operator and to protect the apparatus against damage.
	Indicates dangerous voltages.
	Indicates a protected ground terminal.
	Indicates eye damage may result from directly viewing the light produced by the deuterium lamp used in this product.
	The apparatus is marked with this symbol when hot surfaces are available and the user should not touch it when heated up.

WARNING

A WARNING

alerts you to situations that could cause physical injury or death.

→ Do not proceed beyond a warning until you have fully understood and met the indicated conditions.

CAUTION

A CAUTION

alerts you to situations that could cause loss of data, or damage of equipment.

→ Do not proceed beyond a caution until you have fully understood and met the indicated conditions.

General Safety Information

The following general safety precautions must be observed during all phases of operation, service, and repair of this instrument. Failure to comply with these precautions or with specific warnings elsewhere in this manual violates safety standards of design, manufacture, and intended use of the instrument. Agilent Technologies assumes no liability for the customer's failure to comply with these requirements.

WARNING

Ensure the proper usage of the equipment.

The protection provided by the equipment may be impaired.

→ The operator of this instrument is advised to use the equipment in a manner as specified in this manual.

Safety Standards

This is a Safety Class I instrument (provided with terminal for protective earthing) and has been manufactured and tested according to international safety standards.

Operation

Before applying power, comply with the installation section. Additionally the following must be observed.

Do not remove instrument covers when operating. Before the instrument is switched on, all protective earth terminals, extension cords, auto-transformers, and devices connected to it must be connected to a protective earth via a ground socket. Any interruption of the protective earth grounding will cause a potential shock hazard that could result in serious personal injury. Whenever it is likely that the protection has been impaired, the instrument must be made inoperative and be secured against any intended operation.

Make sure that only fuses with the required rated current and of the specified type (normal blow, time delay, and so on) are used for replacement. The use of repaired fuses and the short-circuiting of fuse holders must be avoided.

Some adjustments described in the manual, are made with power supplied to the instrument, and protective covers removed. Energy available at many points may, if contacted, result in personal injury.

Any adjustment, maintenance, and repair of the opened instrument under voltage should be avoided whenever possible. When inevitable, this has to be carried out by a skilled person who is aware of the hazard involved. Do not attempt internal service or adjustment unless another person, capable of rendering first aid and resuscitation, is present. Do not replace components with power cable connected.

Do not operate the instrument in the presence of flammable gases or fumes. Operation of any electrical instrument in such an environment constitutes a definite safety hazard.

Do not install substitute parts or make any unauthorized modification to the instrument.

Capacitors inside the instrument may still be charged, even though the instrument has been disconnected from its source of supply. Dangerous voltages, capable of causing serious personal injury, are present in this instrument. Use extreme caution when handling, testing and adjusting.

When working with solvents please observe appropriate safety procedures (e.g. goggles, safety gloves and protective clothing) as described in the material handling and safety data sheet by the solvent vendor, especially when toxic or hazardous solvents are used.

The Waste Electrical and Electronic Equipment (WEEE) Directive (2002-96-EC)

Abstract

The Waste Electrical and Electronic Equipment (WEEE) Directive (2002/96/EC), adopted by EU Commission on 13 February 2003, is introducing producer responsibility on all Electric and Electronic appliances from 13 August 2005.

NOTE

This product complies with the WEEE Directive (2002/96/EC) marking requirements. The affixed label indicates that you must not discard this electrical/electronic product in domestic household waste.

Product Category: With reference to the equipment types in the WEEE Directive Annex I, this product is classed as a “Monitoring and Control instrumentation” product.

Do not dispose off in domestic household waste

To return unwanted products, contact your local Agilent office, or see www.agilent.com for more information.

Solvent Information

Observe the following recommendations on the use of solvents.

- Brown glass ware can avoid growth of algae.
- Avoid the use of the following steel-corrosive solvents:
  - Solutions of alkali halides and their respective acids (for example, lithium iodide, potassium chloride, and so on),
  - High concentrations of inorganic acids like sulfuric acid and nitric acid, especially at higher temperatures (if your chromatography method allows, replace by phosphoric acid or phosphate buffer which are less corrosive against stainless steel),
  - Halogenated solvents or mixtures which form radicals and/or acids, for example:

    $2CHCl_3 + O_2 \rightarrow 2COCl_2 + 2HCl$

    This reaction, in which stainless steel probably acts as a catalyst, occurs quickly with dried chloroform if the drying process removes the stabilizing alcohol,
  - Chromatographic grade ethers, which can contain peroxides (for example, THF, dioxane, di-isopropylether) such ethers should be filtered through dry aluminium oxide which adsorbs the peroxides,
  - Solvents containing strong complexing agents (e.g. EDTA),
  - Mixtures of carbon tetrachloride with 2-propanol or THF.

Radio Interference

Never use cables other than the ones supplied by Aligent Technologies to ensure proper functionality and compliance with safety or EMC regulations.

Test and Measurement

If test and measurement equipment is operated with equipment unscreened cables and/or used for measurements on open set-ups, the user has to assure that under operating conditions the radio interference limits are still met within the premises.

Sound Emission

Manufacturer's Declaration

This statement is provided to comply with the requirements of the German Sound Emission Directive of 18 January 1991.

This product has a sound pressure emission (at the operator position) < 70 dB.

- Sound Pressure Lp < 70 dB (A)
- At Operator Position
- Normal Operation
- According to ISO 7779:1988/EN 27779/1991 (Type Test)

Agilent Technologies on Internet

For the latest information on products and services visit our worldwide web site on the Internet at:

http://www.agilent.com

Select Products/Chemical Analysis

It will provide also the latest firmware of the modules for download.

Index

www.agilent.com

In This Book

This manual contains technical reference information about the Agilent 1290 Infinity Binary Pump G4220B.

- introduction and specifications,
- installation,
- using and optimizing,
- troubleshooting and diagnose,
- maintenance,
- parts identification,
- safety and related information.

Printed in Germany
06/2010

G4220-90001

Agilent Technologies